ELECTRICAL SPECIFICATIONS

PROTOTYPICAL "NO SURPRISE" MEP BID NOTE:
EACH SET OF DRAWINGS IS INDIVIDUALLY ASSEMBLED AND AN ATTEMPT IS MADE TO INCLUDE LEASE SCOPE IN THE DRAWING SET. HOWEVER, THE CONTRACTOR SHALL VISIT THE SITE TO CONFIRM WHAT IS LISTED AS EXISTING BY LANDLORD, OR SIMILAR IS ACTUALLY THERE, AND IF IT IS NOT, THE CONTRACTOR SHALL PROVIDE ITEMIZED BID TO COMPLETE SUCH GAP WORK TO ENSURE ALL WORK THAT WILL BE REQUIRED BY CONTRACTOR IS INCLUDED IN THE CONTRACTOR'S SCOPE. IF THE CONTRACTOR PROVIDES A BULK BID OR SINGLE PRICE BID, IT WILL INCLUDE EVERYTHING REQUIRED TO BUILD A COMPLETE STORE, INCLUDING ANY WORK "BY OTHERS" THAT IS NOT PRESENT.

16010 WORK INCLUDED:

1.1 CONTRACTOR SHALL PROVIDE THE FOLLOWING;
a. LABOR
b. SUPPLIES
c. MATERIALS
d. SHOP DRAWINGS
e. PERMITS AND INSPECTION FEES
f. CERTIFICATION OF FINAL INSPECTION AND APPROVAL
g. ONE YEAR GUARANTEE

1.2 CONTRACTOR SHALL PERFORM THE FOLLOWING;
a. INSTALLATION OF ALL ELECTRICAL EQUIPMENT.
b. COORDINATE WITH OTHER TRADES OF ELECTRICAL EQUIPMENT INSTALLATION.
c. MATERIAL PROTECTION DURING CONSTRUCTION.
d. TEST OF ENTIRE SYSTEM IN PRESENCE OF OWNER OR HIS REPRESENTATIVE AND CORRECT ANY DEFICIENCIES DISCOVERED.
e. COORDINATION OF ELECTRICAL SERVICE AND METERING WITH LOCAL POWER COMPANY.
f. COORDINATION OF TELEPHONE SERVICE WITH LOCAL TELEPHONE COMPANY.

1.3 GOVERNING CODES SHALL BE THE FOLLOWING;
a. LOCAL MUNICIPALITY ELECTRICAL CODE.
b. PER LATEST NATIONAL ELECTRICAL CODE (NEC)
c. UTILITY COMPANY REGULATIONS
d. AMERICANS WITH DISABILITY ACT
e. CURRENT APPLICABLE BUILDING CODES
f. LOCAL BUILDING CODES AND ORDINANCES
g. THE NATIONAL MANUFACTURER'S ASSOCIATION STANDARDS (NEMA)
h. UNDERWRITER LABORATORIES INCORPORATED STANDARD(S)
i. AMERICAN NATIONAL STANDARD INSTITUTE (ANSI)
j. THE MANUFACTURER'S RECOMMENDATION

1.4 MATERIAL WILL BE;
a. NEW
b. UL LISTED

16110 RACEWAYS

1.1 USE AND TYPES
a. SERVICE ENTRANCE – RIGID STEEL
b. FEEDERS – RIGID STEEL EXCEPT ABOVE 8'-0" AND INDOOR THEN EMT
c. BRANCH CIRCUIT, TELEPHONE OR COMMUNICATIONS – EMT
d. IN EARTH OR CONCRETE – SCHEDULE 40 PVC
e. RECESSED LIGHTING FIXTURES – FLEXIBLE STEEL CONDUIT (SHORT BUT MAXIMUM 72")
f. OUTDOOR FINAL CONNECTION TO EQUIPMENT OR IN WET LOCATIONS – LIQUID TIGHT FLEXIBLE STEEL CONDUIT (MAXIMUM 36")
g. ALL RACEWAYS, UNLESS SPECIFICALLY INDICATED TO BE EXPOSED, SHALL BE CONCEALED IN WALLS, CEILING OR FLOORS.
h. PAINT ALL EXPOSED RACEWAYS COLOR AS DIRECTED BY ARCHITECT.

1.2 CONDUIT BUSHING,
a. PROVIDE INSULATED CONDUIT BUSHING AT EACH END OF EVERY CONDUIT RUN.

16120 WIRES AND CABLES 600 VOLTS

1.1 COLOR CODING

	208Y/120V	480Y/277V
PHASE A	BLACK	BROWN
PHASE B	BLUE	YELLOW
PHASE C	RED	ORANGE
NEUTRAL	WHITE	WHITE
GROUND	GREEN	GREEN

1.2 INSULATED, THHN, THWN, XHHW 75 DEGREE C (THWN OR BETTER, WET-RATED FOR BELOW GRADE).

1.3 PROVIDE COPPER WIRING UNLESS ALUMINUM IS SPECIFICALLY SOWN ON THE DRAWINGS. WHEN ALUMINUM CONDUCTORS ARE UTILIZED – PROVIDE COMPRESSION LUG FITTINGS.

1.4 FIXTURE WIRE, 600 VOLTS, 200 DEGREE C. #14 AWG MINIMUM STRANDED, TINNED COPPER WITH SILICONE RUBBER INSULATION AND AN OVERALL JACKET OF GLASS BRAID, AND RATED AS NEC TYPE 'SF-2'

16130 BOXES

1.1 ATTACHED SECURELY TO BUILDING CONSTRUCTION OR SUPPORT FROM SAME

1.2 MASONRY BOXES SHALL BE RACO OR STEEL CITY

1.3 EXPOSED BOXES SHALL BE CAST TYPE SIMILAR TO CROUSE HINDS TYPE FS

1.4 ALL OTHERS SHALL BE STAMPED STEEL

16140 WIRING DEVICES

1.1 RECEPTACLES
a. DUPLEX – 15 AMPS, 125V. AC GROUNDED UNO
b. SINGLE – 15 AMPS, 125V. AC GROUNDED UNO
c. COORDINATE COLOR OF DEVICE WITH ARCHITECT, ALSO SEE NOTES ON E1.0
d. COORDINATE FINISH AND COLOR OF COVER PLATE WITH ARCHITECT, ALSO SEE NOTES ON E1.0

1.2 WALL SWITCHES
a. SINGLE POLE – 20 AMPS, SINGLE THROW, QUIET TYPE, GROUNDED
b. COORDINATE COLOR OF DEVICE WITH ARCHITECT, ALSO SEE NOTES ON E1.0
c. COORDINATE FINISH AND COLOR OF COVER PLATE WITH ARCHITECT, ALSO SEE NOTES ON E1.0

1.3 TIME CLOCK
a. FURNISH AND INSTALL A TWENTY FOUR (24), SEVEN (7) DAY TIME CLOCK INCLUDING ALL INTEGRAL WIRING AND LOAD BALANCING (PANEL) FOR CONTROLLING THE STOREFRONT SIGN AND SHOW WINDOW LIGHTING, WHETHER SUCH WORK IS OR IS NOT SHOWN ON PLANS OR SPECIFICATIONS

16170 PANEL BOARDS

1.1 PANEL BOARDS SHALL HAVE, BUT NOT BE LIMITED TO THE FOLLOWING;
a. THREE PHASE, 4 WIRE, COPPER BUSING, NEMA 1 ENCLOSURE FOR INDOOR, NEMA 3R FOR OUTDOOR.
b. GROUND BUS WITH SET SCREW CONNECTIONS
c. SOLID NEUTRAL, 100% RATED WITH SET SCREW CONNECTION
d. SWITCH RATED BOLT-ON BREAKERS
e. TYPE WRITTEN DIRECTORY
f. PLAQUE, BLACK WITH 1" HIGH WHITE LETTERS TO INDICATE PANEL NAME
g. SQUARE D, GENERAL ELECTRIC OR SIEMENS

16190 GROUNDING

1.1 FEEDERS AND BRANCH CIRCUITS
a. PROVIDE A GREEN INSULATED GROUND CONDUCTOR, SIZED PER THE NEC IN EACH RACEWAY

16200 LIGHTING FIXTURES

1.1 COORDINATE FIXTURE TRIMS WITH CEILING IN/ON WHICH IT IS BEING INSULATED.

1.2 MATCH VOLTAGE OF FIXTURE TO CIRCUIT TO CIRCUIT TO WHICH FIXTURE IS SHOWN CONNECTED

1.3 PROVIDE LOW TEMPERATURE HIGH EFFICIENCY ELECTRONIC BALLASTS IN FLUORESCENT FIXTURES

1.4 PROVIDE THERMAL OVERLOAD PROTECTION IN BOTH FLUORESCENT AND INCANDESCENT FIXTURES

1.5 NARRATIVE DESCRIPTION IN LIGHTING FIXTURE SCHEDULE TAKES PRECEDENCE OVER CATALOG NUMBER

1.6 PROVIDE INTEGRAL DISCONNECTING MEANS FOR ALL FLUORESCENT FIXTURES PER THE NEC

16210 EXISTING CONDITION

1.1 VISIT SITE AND BECOME FAMILIAR WITH EXISTING CONDITIONS IN AND AROUND THE BUILDINGS

16220 TELEPHONE SERVICE

1.1 SAFETY SWITCHES SHALL BE HEAVY DUTY TYPE, 600 OR 250 VOLT, WITH NUMBER OF POLES REQUIRED. FUSED SAFETY SWITCHES SHALL BE QUICK-MAKE, QUICK-BREAK MECHANISM, VISIBLE BLADES WITH REJECTION TYPE FUSE CLIPS AND NEMA CLASS "LPJ" FUSES, THE SWITCHES SHALL BE NEMA 3R FOR OUTDOOR. ALL SWITCHES SHALL BE LOCKABLE.

PLUMBING SPECIFICATIONS

SECTION 15-A – PLUMBING

15A-01 GENERAL:

A. ALL PLUMBING WORK SHALL CONFORM TO THE LANDLORD'S CRITERIA, THE STATE, COUNTY, CITY, LOCAL CODES AND ORDINANCES, SAFETY AND HEALTH CODES, NFPA CODES, ENERGY CODES AND ALL OTHER APPLICABLE CODES AND REQUIREMENTS. INCORPORATE ALL REQUIREMENTS WITH THIS WORK, WHETHER SPECIFICALLY INDICATED ON PLANS OR NOT. ADVISE ARCHITECT IF REQUIREMENTS ARE CONTRARY TO THESE PLANS. IT IS INTENDED THAT THE CONTRACTOR SHALL PROVIDE A COMPLETE AND FUNCTIONAL SYSTEM.

B. THIS CONTRACTOR SHALL OBTAIN AND PAY FOR ALL LICENSES, PERMITS, INSPECTIONS AND FEES REQUIRED OR RELATED TO HIS WORK.

C. CONTRACTOR SHALL DETERMINE THE LOCATION OF EXISTING WATER SUPPLY AND DRAIN LINES AND MAKE PROPER CONNECTION THERETO, INCLUDING VENTS.

D. ALL MATERIALS SHALL BE NEW AND SHALL FIT THE SPACE AVAILABLE. VERIFY ALL DIMENSIONS AT THE SITE.

E. ALL VALVES, CLEANOUTS, ETC., SHALL BE SO LOCATED AND INSTALLED TO PERMIT ACCESS FOR SERVICE WITHOUT DAMAGE TO BUILDING OR FINISHED MATERIAL.

F. ALL PLUMBING EQUIPMENT AND WORK SHALL BE GUARANTEED FOR ONE YEAR AFTER FINAL ACCEPTANCE BY LANDLORD AND TENANT.

15A-02 MATERIALS

A. REFER TO PLANS FOR SCHEDULES OF EQUIPMENT AND FIXTURES. AMERICAN STANDARD, KOHLER AND CRANE ARE CONSIDERED ACCEPTABLE AS EQUALS. ALL PLUMBING EQUIPMENT SHALL BE INSTALLED IN ACCORDANCE WITH THE MANUFACTURER'S RECOMMENDATIONS.

B. SANITARY PIPING:
1. WHERE NOT OTHERWISE SPECIFIED THROUGHOUT THE DRAWING SET, WASTE, DRAIN AND VENT PIPING SHALL BE PER LOCAL CODE AND AUTHORITY HAVING JURISDICTION. VENT PIPING ABOVE FLOOR 2" OR SMALLER MAY BE GALVANIZED STEEL.
2. PROVIDE LINE-ITEM BID TO UTILIZE PVC, OBTAIN APPROVAL FROM INSPECTOR PRIOR TO INSTALLATION THAT PVC IS ALLOWED FOR THE SPECIFIC HVAC LAYOUT FOR THIS PROJECT.
3. INSULATE ALL HORIZONTAL RUNS OF PIPING LOCATED IN CEILING SPACES OF TENANTS IN SPACES BELOW WHEN APPLICABLE. INSULATION TO BE AS SPECIFIED FOR WATER PIPING.
4. CONDENSATE PIPING SHALL BE TYPE "L" HARD DRAWN COPPER TUBE WITH 95-5 TIN-ANTIMONY SOLDERED JOINTS AND WROUGHT COPPER FITTINGS WITH DIELECTRIC SEPARATION BETWEEN DISSIMILAR METALS. CONDENSATE PIPING BELOW ROOF DECK MAY BE PVC. PROVIDE SHARKBITE TRANSITION FROM PVC TO COPPER.
5. ANY WASTE PIPING EXPOSED IN PARKING AREAS SHALL BE PROTECTED FROM MECHANICAL DAMAGE AND SHALL BE PROVIDED WITH FREEZE PROTECTION (HEAT TAPE & INSULATION) WHERE SUBJECT TO POSSIBLE FREEZING CONDITIONS.

C. POTABLE WATER PIPING
1. WATER PIPING IN CEILING SPACE AND WITHIN WALLS MAY BE TYPE 'L' COPPER OR PEX, ISNTALLED PER MANUFACTURER'S INSTRUCTIONS. PROVIDE SHARK-BITE TRANSITIONS, OR APPROVED EQUALS.
2. BELOW GRADE: TYPE "K", ANNEALED TEMPERED COPPER TUBE FOR PIPE SIZES 2 INCHES AND SMALLER. BRAZE ALL JOINTS.
3. WHERE APPLICABLE, TRANSITIONS BETWEEN COPPER AND PLASTIC PIPE SHALL BE MADE BY SHARKBITE OR SIMILAR TRANSITIONS, RATED FOR USE WITH SUCH MATERIALS AS ARE BEING USED.

D. PIPING OF DISSIMILAR METALS MUST BE DI-ELECTRICALLY SEPARATED.

E. INSULATE ALL HOT WATER, COLD WATER AND CONDENSATE PIPING WITH 1" THICK (K=0.23 @ 75F) PIPE INSULATION WITH AN ALL SERVICE JACKET TO MEET LOCAL CODES AND UL FLAME SPREAD AND SMOKE DEVELOPED RATINGS. OWENS-CORNING OR EQUAL.

F. INSULATE THE TRAP, SANITARY AND SUPPLY PIPES UNDER LAVATORY WITH 1/2" ARMSTRONG "ARMAFLEX" PIPING INSULATION OR TRUEBRO MODEL 102W "HANDI LAV GUARD" INSULATION KIT.

G. INSTALL AIR CHAMBER SHOCK ABSORBERS IN BOTH HOT AND COLD LINES OF PIPING SYSTEM TO PREVENT NOISE AND DAMAGE DUE TO WATER HAMMER. J.R. SMITH 5000 SERIES ALL STAINLESS STEEL "HYDROTROLS" OR EQUAL, INSTALLED IN AN UPRIGHT POSITION.

H. ALL BRANCH PIPING SYSTEMS SHALL HAVE ACCESSIBLE SERVICE VALVE. PROVIDE SHUT OFF VALVES IN THE SUPPLY PIPING TO EVERY FIXTURE. PROVIDE ACCESS DOORS WHERE NECESSARY.

I. INSTALL ALL NECESSARY PIPE HANGERS, SADDLES AND CARRIERS TO PROPERLY SUPPORT ALL PIPING AND FIXTURES. HANGERS SHALL SUIT TYPE OF PIPING AND SEISMIC BRACING WHERE REQUIRED BY CODES.

J. STERILIZE WATER SYSTEM IN ACCORDANCE WITH LOCAL CODES.

K. CLEAN-OUTS AND FLOOR DRAINS SHALL BE INSTALLED PER LOCAL CODES.

L. ESCUTCHEONS SHALL BE CHROME PLATED, SIZE AS REQUIRED AND PLACE AT ALL PIPE PENETRATIONS AT WALL, FLOORS AND CEILINGS IN FINISHED AREAS.

M. LEAKAGE TESTS SHALL BE PER LOCAL CODES.

N. FLASHING SHALL BE SEALED WATERTIGHT AND PERFORMED IN ACCORDANCE TO THE LANDLORD'S CRITERIA. USE LANDLORD APPROVED ROOFING CONTRACTOR WHERE APPLICABLE.

O. NOT USED.

P. GAS PIPING
1. PROVIDE A COMPLETE GAS PIPING SYSTEM IF APPLICABLE. REFER TO PLANS TO DETERMINE IF A GAS SYSTEM IS REQUIRED.
2. GAS LINES SHALL BE BLACK STEEL, SCHEDULE 40, ASTM A-120, WITH MALLEABLE THREADED FITTINGS FOR 2" AND SMALLER, AND WITH WELDED JOINTS FOR 2 1/2" AND LARGER.
3. PROVIDE A GAS COCK, DIRT LEG, AND UNION CONNECTION TO EACH PIECE OF EQUIPMENT.
4. PITCH PIPING AT A UNIFORM GRADE OF 1/4" IN 15 FEET UPWARD IN DIRECTION OF FLOOR. SUPPORT PIPING EVERY 5 FEET. SUPPORT AS REQUIRED BY LANDLORD CRITERIA, AS DETAILED ON DRAWINGS, OR BY STANDARD INDUSTRY PRACTICE, WHICHEVER IS MORE STRINGENT.
5. GAS PIPING EXPOSED ON ROOF MUST BE PAINTED WITH RUST-INHIBITING PAINT.
6. GAS PIPING INSTALLED IN RETURN AIR PLENUMS SHALL BE SLEEVED AND VENTED OR WELDED IN ACCORDANCE WITH THE LOCAL GAS COMPANY, LOCAL CODE AND APPLICABLE NFPA 54 CODES.
7. TESTING AND PURGING OF GAS PIPING SHALL BE DONE PER THE REQUIREMENTS OF THE LOCAL GAS COMPANY, LOCAL CODES AND APPLICABLE NFPA 54 CODES.
8. CONTACT AND COORDINATION GAS SERVICE AND METER REQUIREMENTS WITH THE LOCAL GAS COMPANY AND THE MALL'S OPERATIONS MANAGER PRIOR TO BID. INCLUDE INSTALLATION OF GAS METER COSTS IN BID.

MECHANICAL SPECIFICATIONS

SECTION 15-C – HEATING, VENTILATION, AIR CONDITIONING

15C-01 GENERAL:

A. ALL WORK SHALL CONFORM TO THE LANDLORD'S CRITERIA, THE STATE, COUNTY, CITY CODES AND ORDINANCES, SAFETY AND HEALTH CODES NFPA CODES, ENERGY CODES AND ALL OTHER APPLICABLE CODES AND REQUIREMENTS. INCORPORATE ALL REQUIREMENTS INTO THIS WORK, WHETHER SPECIFICALLY INDICATED ON PLANS OR NOT. ADVISE ARCHITECT IF REQUIREMENTS CONTRADICT THESE PLANS. IT IS INTENDED THAT THE CONTRACTOR SHALL PROVIDE A COMPLETE AND FUNCTIONAL SYSTEM.

B. THIS CONTRACTOR SHALL OBTAIN AND PAY FOR ALL LICENSES, PERMITS, INSPECTIONS, AND FEES REQUIRED OR RELATED TO HIS WORK.

C. ALL MATERIALS SHALL BE NEW AND SHALL FIT THE SPACE AVAILABLE. VERIFY ALL DIMENSIONS AT THE SITE.

D. ALL VALVES, DAMPERS, ETC., SHALL BE SO LOCATED AND INSTALLED TO PERMIT ACCESS FOR SERVICE WITHOUT DAMAGE TO BUILDING OR FINISHED MATERIALS.

E. ALL EQUIPMENT AND WORK SHALL BE GUARANTEED FOR ONE YEAR AFTER FINAL ACCEPTANCE BY LANDLORD AND TENANT.

F. LABEL ALL RTUS WITH RTU# AND TENANT'S NAME.

15C-02 MATERIALS:

A. REFER TO PLANS FOR SCHEDULES OF EQUIPMENT. ALL EQUIPMENT SHALL BE COMPLETE IN EVERY RESPECT WITH ALL DEVICES, APPURTENANCES, AND ACCESSORIES PROVIDED TO MEET THE DESIGN INTENT AND OPERATION OF THE SYSTEMS SHOWN ON THE DRAWINGS AND SPECIFIED HEREIN. EQUIPMENT SHALL BE INSTALLED IN STRICT ACCORDANCE WITH THE MANUFACTURER'S INSTRUCTIONS. ALL AIR CONDITIONING EQUIPMENT MUST BE TRAPPED IN ACCORDANCE WITH MANUFACTURERS DATA.

B. DUCTWORK:
1. BASE BID SHALL BE FOR DOUBLE-WALL INSULATED ROUND SPIRAL SUPPLY DUCTWORK.
2. BASE BID SHALL BE FOR UNINSULATED SINGLE-WALL METAL DUCT WORK FOR EXHAUST AND RETURN DUCTWORK.
3. FABRICATE AND INSTALL RECTANGULAR AND ROUND DUCTWORK IN ACCORDANCE WITH SMACNA "HVAC DUCT CONSTRUCTION STANDARDS" OF THE LATEST EDITION.
4. NOT USED.
5. INSTALL RIGID ROUND AND RECTANGULAR WITH SUPPORT SYSTEMS INDICATED IN SMACNA STANDARDS. PROVIDE SWAY AND SEISMIC BRACING AS REQUIRED BY STATE AND LOCAL CODES OR BY LANDLORD.
6. ALL JOINTS AND SEAMS SHALL BE SEALED. TOTAL LEAKAGE SHALL NOT EXCEED 5% FOR THE SYSTEM.
7. ALL DUCTWORK SHALL BE INSTALLED WITH INSIDE CLEAR DIMENSIONS AS NOTED ON DRAWINGS. WHERE DUCTWORK SIZE IN LARGER THAN CONNECTED DEVICE SMOOTH DUCT TRANSITIONS ARE TO TAKE PLACE JUST PRIOR TO DEVICE CONNECTIONS.

C. FLEXIBLE COLLARS AT EQUIPMENT SHALL BE PROVIDED IN ALL CONNECTIONS BETWEEN VIBRATING EQUIPMENT AND DUCTS OR CASINGS. FLEXIBLE CONNECTIONS SHALL CONSTRUCTED OF NEOPRENE-COATED FLAMEPROOF FABRIC. PROVIDE ADEQUATE JOINT FLEXIBILITY TO ALLOW FOR MOVEMENT AND PREVENT THE TRANSMISSION OF VIBRATION.

D. FLEXIBLE AIR DUCT AT AIR DEVICES SHALL BE 1" INSULATED CLASS 1 AND RATED FOR THE OPERATING PRESSURE OF THE SYSTEM. DUCT CONSTRUCTION MATERIAL MUST ADHERE TO LOCAL CODES AND LANDLORD'S REQUIREMENTS, AND SHALL BE FULLY CONCEALED FROM VIEW WITH RUNS NO MORE THAN 5'-0".

E. PROVIDE MANUAL LOCKING QUADRANT VOLUME CONTROL DAMPERS WITH HANDLE OPERATORS IN EACH BRANCH DUCT AND AS SHOWN ON PLANS TO FACILITATE AIR BALANCING. ALL RECTANGULAR DAMPERS IN OUTSIDE AIR, RELIEF AIR, EXHAUST OR RETURN AIR DUCTS ARE TO BE OF OPPOSED BLADE TYPE.

F. PROVIDE PRIMARY FIRE DAMPERS WHERE INDICATED OR REQUIRED BY CODES. FIRE DAMPERS SHALL BE UL LABELED. FIRE DAMPERS SHALL HAVE THE BLADES OUT OF THE AIRSTREAM AND A 165'F FUSIBLE LINK, TYPE B, AS MINIMUM.

G. DUCTWORK INSULATION
1. INSTALL INSULATION PRODUCTS IN ACCORDANCE WITH MANUFACTURER'S WRITTEN INSTRUCTIONS AND IN ACCORDANCE WITH RECOGNIZED INDUSTRY PRACTICES. INSULATION MUST COMPLY WITH NFPA 90A.
2. DUCT SIZES SHOWN ON DRAWINGS ARE INSIDE CLEAR DIMENSIONS. ALL SUPPLY AND RETURN AIR RECTANGULAR DUCTWORK SHALL BE INTERNALLY INSULATED WITH 1" THICK, 1 1/2" LB. DENSITY LINER (C=0.28 @ 75'F.). LINER IS TO HAVE A COATED SURFACE EXPOSED TO AIRSTREAM TO PREVENT EROSION. APPLY ADHESIVES AND MECHANICAL FASTENERS AS RECOMMENDED BY SMACNA AND THE MANUFACTURER TO PREVENT LINER SEPARATION FROM THE DUCT. ALL TRANSVERSE EDGES TO BE COATED WITH ADHESIVE.
3. ALL ROUND AND OUTSIDE AIR DUCTWORK SHALL BE EXTERNALLY INSULATED WITH A MINIMUM OF 1 1/2" THICK, #1 DENSITY (R=5.6) DUCT WRAP WITH VAPOR BARRIER. VAPOR BARRIER IS TO BE MAINTAINED THROUGHOUT DUCT SYSTEM. ALL JOINTS MUST BE TAPED TO THAT NO INSULATION FIBER IS VISIBLE. EXTEND DUCTWORK INSULATION WITHOUT INTERRUPTION THROUGH WALLS, FLOORS, AND SIMILAR PENETRATIONS.
4. ALL INSULATION SHALL HAVE A FLAME SPREAD RATING OF NOTE MORE THAN 25 AND A SMOKE DEVELOPED RATING OF NO HIGHER THAN 50 WHEN TESTED IN ACCORDANCE WITH ASTM C 411, OR AS REQUIRED BY LOCAL CODES.

H. TESTING, ADJUSTING AND BALANCING:
1. TESTING, ADJUSTING AND BALANCING OF ALL WORK SHALL BE MADE BY AN INDEPENDENT CONTRACTOR WHO IS CURRENTLY LICENSED ASSOCIATED AIR BALANCING COUNCIL (AABC) OR NATIONAL ENVIRONMENTAL BALANCE BUREAU (NEBB) BALANCING CONTRACTOR. ALL BALANCING WORK MUST BE COMPLETE AND DONE IN ACCORDANCE WITH THE MOST RECENT STANDARDS OF THEIR SOCIETY. PAYMENT OF ALL COSTS FOR TESTING AND BALANCING SHALL BE INCLUDED IN THE BID. TESTING AND BALANCING REPORT MUST INCLUDE THE OUTSIDE AIR CFM'S AND THE EXHAUST CFM'S.
2. BALANCE AIR AND WATER QUANTITIES TO WITHIN +/- 5% OF THAT INDICATED ON THE DRAWINGS. ANY REQUIRED CHANGES IN SHEAVES, BELTS, PULLEYS OR THE ADDITION OF DAMPERS REQUIRED TO ACHIEVE SPECIFIED FLOW RATES SHALL BE PERFORMED BY THE HVAC CONTRACTOR WITH NO ADDITIONAL COST TO THE TENANT.
3. FOUR COPIES OF THE BALANCE REPORT SHALL BE SUBMITTED TO TENANT AND LANDLORD FOR APPROVAL.

I. RECORD DRAWINGS:
1. AT THE END OF THE PROJECT THIS CONTRACTOR SHALL SUBMIT 4 COPIES OF RECORD DRAWINGS SHOWING EXACT LOCATIONS OF UNITS, DUCTS, DIFFUSERS, ETC.

J. ECONOMIZER:
1. GENERALLY, AN ECONOMIZER IS REQUIRED BY THE LATEST VERSIONS OF IECC IN ALL JURISDICTIONS EXCEPT SOUTH FLORIDA (CLIMATE ZONE 1). THE MECHANICAL CONTRACTOR SHALL ORDER ALL NEW ROOF-TOP HVAC UNITS WITH ECONOMIZERS, THE MECHANICAL CONTRACTOR SHALL ORDER ALL SPLIT SYSTEMS, FAN COIL UNITS, WATER SOURCE HEAT PUMPS, OR OTHER MECHANICAL UNITS THAT ARE TO BE OPERATED MORE THAN 20 HOURS PER WEEK WITH ECONOMIZERS, FACTORY INSTALLED WHERE POSSIBLE OR WITH CAPABILITY FOR ECONOMIZER WHERE CONTROLS ARE TO BE FIELD INSTALLED, AND TO INSTALL ALL COMPONENTS – SUCH AS OUTSIDE AIR DUCTS AND DUAL ENTHALPY SENSORS, CONTROLS, ETC. ON SPLIT SYSTEMS A NECESSARY TO MEET LOCAL CODE. THE CONTRACTOR SHALL VERIFY WITH THE LOCAL INSPECTOR WHAT VERSION OF ENERGY CODE IS ENFORCED IN THE JURISDICTION OF THE PROJECT AND FOR UNITS OTHER THAN PACKAGED ROOFTOP UNITS MAY OMIT THE ECONOMIZER PACKAGE WHERE THE AHJ DOES NOT REQUIRE IT.

ROOFTOP UNIT SEQUENCE OF OPERATION – CO2 SENSOR & ECONOMIZER

FAN CONTROL:
THE SUPPLY FAN IS TO RUN CONTINUOUSLY DURING THE OCCUPIED MODE AND CYCLE ON AND OFF DURING THE UNOCCUPIED MODE BASED ON A CALL FOR HEATING OR COOLING. THE UNOCCUPIED SET POINT FOR COOLING WILL BE 85' FAHRENHEIT AND 60' FAHRENHEIT FOR HEATING.

THERMOSTAT:
THE ADJUSTABLE ROOM THERMOSTAT WITH AUTOMATIC HEATING/COOLING CHANGEOVER SHALL CONTROL THE SPACE TEMPERATURE BASED ON SET POINT. THE CONTROL OF THE OCCUPIED/UNOCCUPIED SETBACK MODE SHALL BE THROUGH THE LIGHT SENSING FUNCTION OF THE THERMOSTAT. PROVIDE 24/7 CONTROLLABLE TYPE. THERMOSTATS SHALL HAVE AUTOMATIC CHANGEOVER, 5 DEGREE DEADBAND (TEMPERATURE SET-POINT OVERLAP RESTRICTIONS) AND SHALL ALLOW AUTOMATIC RESTART AND TEMPORARY OPERATION AS REQUIRED FOR MAINTENANCE, PER ENERGY CODE.

SAFETIES:
THE UNIT SHALL BE TOTALLY DISABLED WHEN THE DUCT MOUNTED SMOKE DETECTOR IS ACTIVATED. PROVIDE REMOTE TEST STATION/ALARM WHEN REQUIRED BY CODE. PROVIDE LANDLORD REQUIRED SEQUENCE OR INTERFACE AS REQUIRED.

COOLING CONTROL:
UPON A CALL FOR COOLING, THE FIRST STAGE OF COOLING WILL BE ENABLED AND WILL OPERATE UNTIL THE SPACE TEMPERATURE IS SATISFIED. IF THE SPACE TEMPERATURE CONTINUES TO INCREASE THEN THE SECOND STAGE OF COOLING WILL BE ENABLED (IF APPLICABLE.)

HEATING CONTROL:
UPON A CALL FOR HEATING, THE FIRST STAGE OF HEATING WILL BE ENABLED AND WILL OPERATE UNTIL THE SPACE TEMPERATURE IS SATISFIED. IF THE SPACE TEMPERATURE CONTINUES TO DECREASE THEN THE SECOND STAGE OF HEATING WILL BE ENABLED (IF APPLICABLE.)

VENTILATION/ECONOMIZER CONTROL:
(WHERE REQUIRED BY A.H.J. OR WHERE CALLED FOR ELSEWHERE IN THE DRAWING SET):
THE OUTSIDE AIR DAMPER SHALL BE OPEN DURING THE OCCUPIED HEATING AND COOLING MODES FOR CODE REQUIRED MINIMUM OUTSIDE AIR VENTILATION AND SHALL REMAIN CLOSED DURING THE UNOCCUPIED MODE. IN THE OCCUPIED MODE THE CO2 SENSOR SHALL MODULATE THE OUTSIDE AIR DAMPER WHEN THE UNIT OPERATING IN THE MINIMUM OUTSIDE AIR MODE.

THE ECONOMIZER MODE IS ENTHALPY CONTROLLED AND WILL BE OPERATIONAL WHENEVER COOLING IS REQUIRED AND THE OUTSIDE AIR ENTHALPY IS AT OR BELOW THE RETURN AIR ENTHALPY. THE POWER EXHAUST WILL OPERATE WHENEVER THE OUTSIDE AIR DAMPER IS OPEN MORE THAN 60%.

FIRE PROTECTION SYSTEM

1. SPRINKLER SYSTEM TO BE NFPA 13 AND SPRINKLER MONITORED WITH OCCUPANCY NOTIFICATION COMPLYING WITH H.C. AMENDMENTS – 903.4.

2. FIRE SPRINKLER AND FIRE ALARM WORK SHALL BE DONE UNDER A SEPARATE PERMIT (DESIGN/BUILD) BY LICENSED FIRE SPRINKLER AND FIRE ALARM CONTRACTORS.

16270 FIRE ALARM SYSTEM

1.1 FURNISH AND INSTALL FIRE ALARM POWER BOOSTER TO EXISTING BUILDING FIRE ALARM PANEL AS INDICATED ON DRAWINGS. THE FIRE ALARM SYSTEM NEW DEVICES SHALL BE FORMALLY PLANNED BY A LICENSED FIRE ALARM CONTRACTOR WHO SHALL SUBMIT SIGNED AND SEALED DRAWINGS, IF REQUIRED FOR PERMIT, AND SHALL SUPERVISE AND CERTIFY THE INSTALLATION. FIRE ALARM SYSTEM CONTRACTOR SHALL REVIEW THE MECHANICAL DRAWINGS AND PROVIDE AND INSTALL DUCT SMOKE DETECTORS AS REQUIRED IN THE STANDARD MECHANICAL CODE AND BY THE LOCAL FIRE MARSHALL. DESIGN SHALL COMPLY WITH NFPA 72. PROVIDE VOCE EVACUATION MODULES WITH ALL NECESSARY APPURTENANCES.

1.2 REMOTE ANNUNCIATOR
PROVIDE AN ALPHANUMERIC ANNUNCIATOR WITH INTEGRAL ALPHANUMERIC DISPLAY, SYSTEM CONTROL/TEST SWITCHES, KEY OPERATED ENABLED SWITCH AND BACK BOX. COORDINATE LOCATION WITH AUTHORITY HAVING JURISDICTION PRIOR TO ROUGH-IN.

1.3 MANUAL STATIONS
PROVIDE ANALOG ADDRESSABLE MANUAL STATIONS WITH PROTECTIVE COVERS (WITH INTEGRAL HORN AND 9V BATTERY) AS SHOWN ON THE PLANS.

1.4 SYSTEM SMOKE DETECTORS
PROVIDE ANALOG ADDRESSABLE PHOTOELECTRIC SMOKE DETECTORS WITH BASES AS SHOWN.

1.5 DUCT MOUNTED SMOKE DETECTORS
PROVIDE DUCT MOUNTED ANALOG ADDRESSABLE PHOTOELECTRIC SMOKE DETECTORS WITH SAMPLING TUBES AND ADDRESSABLE CONTROL RELAYS AS SHOWN ON THE PLANS AND AS REQUIRED TO COMPLY WITH THE MECHANICAL CODE. WHERE -N-DUCT SMOKE DETECTORS ARE INSTALLED IN CONCEALED LOCATIONS MORE THEN 10 FEET ABOVE THE FINISHED FLOOR OR N ARRANGEMENT WHERE THE DETECTORS ALARM OR SUPERVISORY INDICATOR IS NOT VISIBLE TO RESPONDING PERSONNEL, THE DETECTOR SHALL BE PROVIDED WITH REMOTE ALARM OR SUPERVISORY INDICATION IN A LOCATION ACCEPTABLE TO THE AUTHORITY HAVING JURISDICTION. ADDITIONALLY, LABEL REMOTE ALARMS TO INDICATE BOTH THEIR FUNCTION AND THE AIR HANDLING UNITS(S) ASSOCIATED WITH EACH DETECTOR.

1.6 ADDRESSABLE MONITOR MODULES
PROVIDE ADDRESSABLE MONITOR MODULES AS SHOWN ON THE PLANS TO MONITOR SPRINKLER FLOW SWITCHES, SPRINKLER VALVES, SUPERVISORY SWITCHES AND SPRINKLER FIRE PUMP (AS REQUIRED)

1.7 ADDRESSABLE CONTROL MODULES
PROVIDE ADDRESSABLE CONTROL MODULES AS REQUIRED FOR INTERFACE WITH THE ELEVATOR CONTROLS, ELEVATOR POWER CONTROLS AND HVAC CONTROLS (AS REQUIRED)

1.8 ALARM SIGNALS
PROVIDE 15/75-WW SPEAKER/STROBE ALARM SIGNALS AS SHOWN ON THE PLANS FOR ALL PUBLIC AREAS. PROVIDE 15/75-WW STROBE VISUAL ALARM SIGNALS FOR ALL STROBE ONLY LOCATIONS AS SHOWN ON THE PLANS, 110 CANDELA.

1.9 WIRING
WIRING SHALL BE CONCEALED IN CONDUIT. PROVIDE WIRING AND CONDUIT AS DIRECTED BY THE MANUFACTURER'S AUTHORIZED DISTRIBUTOR.

1.10 APPLICABLE CODES AND STANDARDS
ALL EQUIPMENT SHALL BE UL LISTED FOR ITS INTENDED USE.

ALL RACEWAYS AND WIRING SHALL BE INSTALLED IN COMPLIANCE WITH NFPA STANDARD 70 (NATIONAL ELECTRIC CODE)

NFPA STANDS 71 AND 72

NFPA 101 (LIFE SAFETY CODE)

AMERICANS WITH DISABILITIES ACT (ADA)

STANDARD BUILDING CODE (SBC)

APPLICABLE LOCAL AND NATIONAL CODES AND AUTHORITIES HAVING JURISDICTION

1.11 SYSTEM OPERATION
ACTUATION OF ANY FIRE ALARM INITIATING DEVICE SHALL IMMEDIATELY CAUSE THE FOLLOWING ACTIONS TO BE INITIATED
a. IDENTIFY THE TYPE OF ALARM, SPECIFIC DEVICE AND LOCATION ON THE BACK LIT LCD DISPLAY AT THE BUILDING FIRE ALARM CONTROL PANEL AND AT THE REMOTE ANNUNCIATORS
b. CAUSE THE SYSTEM ALARM LED TO FLASH AT THE FIRE ALARM CONTROL PANEL
c. CAUSE ALL SYSTEM HORNS TO SOUND
d. CAUSE ALL VISUAL ALARMS SIGNALS TO FLASH
e. ACTIVATE THE DIGITAL COMMUNICATOR TO REPORT THE TYPE OF ALARM AND LOCATION TO THE REMOTE CENTRAL MONITORING STATION. COORDINATE CONNECTIONS WITH OWNER'S REPRESENTATIVE.
f. ACTIVATE SIGNALS TO THE BUILDING DOOR LOCK CONTROLS TO DEACTIVATE LOCKS
g. ACTIVATE SIGNALS TO THE HVAC CONTROLS TO INITIATE SHUT DOWN OR REROUTING OF AIR HANDLING SYSTEMS

1.12 ACTIVATION OF ANY SPRINKLER VALVE SUPERVISORY SWITCH SHALL AUTOMATICALLY
a. CAUSE THE SYSTEM SUPERVISORY LED TO FLASH AND AN AUDIBLE INDICATOR TO SOUND AT THE CONTROL PANEL AND REMOTE ANNUNCIATOR.
b. IDENTIFY THE SUPERVISORY CONDITION, SPECIFIC DEVICE AND LOCATION ON THE BACK LIT LCD DISPLAY AT THE SYSTEM CONTROL PANEL AND THE REMOTE ANNUNCIATOR.

ADDITIONAL FIRE PROTECTION NOTES:

SAN JOSE, CA NOTE

THIS BUILDING IS SPRINKLERED AND HAS A BUILDING FIRE ALARM SYSTEM. FIRE PROTECTION DRAWINGS TO MODIFY EXISTING SYSTEMS WILL BE SUBMITTED SEPARATELY FOR SEPARATE PERMIT BY LICENSED FIRE SPRINKLER/FIRE ALARM CONTRACTOR.

DRAWING INFORMATION IS DISTRIBUTED THROUGHOUT THE DOCUMENT SET. CONTRACTORS SHALL THOROUGHLY REVIEW ALL SHEETS AND SHALL NOTIFY CONSTRUCTION MANAGER FOR DIRECTION IF DISCREPANCIES ARE FOUND.

REQUIRED CONTRACTORS:
ROOFER – N/A
FIRE SPRINKLER – CONFIRM WITH LANDLORD
FIRE ALARM – DENISE MOORE SIEMONS INDUSTRIES 510-750-7374
ALL CONTRACTORS SHALL BE PREAPPROVED BY LANDLORD PRIOR TO AWARDING CONTRACTS. ANY AWARDED CONTRACTS SHALL BE CONSIDERED NULL AND VOID, UNLESS THE LANDLORD HAS PROVIDED WRITTEN APPROVAL.

GHA
Architecture / Development
14901 Quorum Drive
Suite 300
Dallas Texas 75254
Ph (972) 239-8884
Fax (972) 239-5054

PETER A. LEPTUCH — REGISTERED PROFESSIONAL ENGINEER — ELECTRICAL — E 19072 — 01/31/20

BISHOPS
BISHOPS – TENANT FINISHOUT
SOUTH MARKET APARTMENTS
1 SOUTH MARKET STREET
SAN JOSE, CA 95113

DO NOT SCALE DRAWINGS CONTRACTOR TO VERIFY ALL EXISTING CONDITIONS AND DIMENSIONS-NOTIFY ARCHITECT OF ANY DISCREPANCIES PRIOR TO BEGINNING CONSTRUCTION

NO	REVISION

PETER A. LEPTUCH — REGISTERED PROFESSIONAL ENGINEER — MECHANICAL — M 35700 — 01/31/20

ISSUE

Peter A. Leptuch, P.E.
CA-M35700/CA-E19072
1236 Golden Eagle Ct.
Aubrey, TX 76227
(940) 735-5127

ISSUE FOR PERMIT 09/18/17

PROJECT NUMBER
C170357

SHEET NUMBER
MEP1.0
SPECIFICATIONS
DATE OF THIS PRINTING – 09/18/17

System No. F-A-1091

F Rating — 4 Hr
T Rating — 1/2 Hr
L Rating At Ambient — 1 CFM/sq ft (See Item 2)
L Rating At 400 F — Less Than 1 CFM/sq ft (See Item 2)
W Rating — Class 1 (See Item 4)

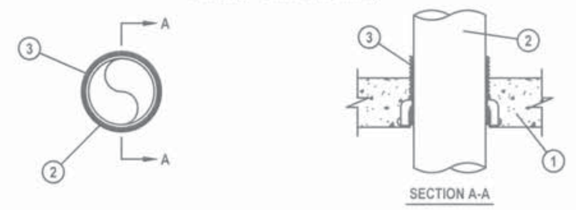

1. Floor Assembly — Min 4-1/2 in. (114 mm) thick reinforced lightweight or normal weight 100-150 pcf (1600-2400 kg/m3) concrete.
1A. Floor Assembly — (Optional, Not Shown) — The fire rated unprotected concrete and steel floor assembly shall be constructed of the materials and in the manner specified in the individual D900 Series designs in the UL Fire Resistance Directory and as summarized below:
A. Concrete — Min 4-1/2 in. (114 mm) thick reinforced lightweight or normal weight 100-150 pcf (1600-2400 kg/m3) concrete.
B. Steel Floor and Form Units* — Composite or non-composite max 3 in. (76 mm) deep galv steel fluted units as specified in the individual Floor-Ceiling Design.
2. Through Penetrants — One metallic pipe, conduit or tubing to be installed within the firestop device. Pipe, conduit or tubing to be rigidly supported on both sides of floor assembly. The following types of pipe, conduit or tubing may be used:
A. Steel Pipe — Nom 6 in. (152 mm) diam (or smaller) Schedule 10 (or heavier) steel pipe.
B. Iron Pipe — Nom 6 in. (152 mm) diam (or smaller) cast or ductile iron pipe.
C. Conduit — Nom 6 in. (152 mm) diam (or smaller) rigid steel conduit.
D. Conduit — Nom 4 in. (102 mm) diam (or smaller) steel electrical metallic conduit.
E. Copper Tubing — Nom 2 in. (51 mm) diam (or smaller) Type L (or heavier) copper tubing.
F. Copper Pipe — Nom 2 in. (51 mm) diam (or smaller) Regular (or heavier) copper pipe.
The firestop device and metallic penetrant shall be sized as follows:

++ L Rating applies only to CP 680-P device and only when the nom diam of pipe equals size of device (2 in. diam pipe in 2" device etc.) L Rating does not apply to CP 680N devices.

Hilti Firestop Systems

Reproduced by HILTI, Inc. Courtesy of Underwriters Laboratories, Inc. February 27, 2008

C UL US

Page: 1 of 2

FA 1091

System No. F-A-1091

F Rating — 4 Hr
T Rating — 1/2 Hr
L Rating At Ambient — 1 CFM/sq ft (See Item 2)
L Rating At 400 F — Less Than 1 CFM/sq ft (See Item 2)
W Rating — Class 1 (See Item 4)

3. Firestop Device* — Cast in place firestop device permanently embedded during concrete placement or grouted in concrete floor assembly in accordance with accompanying installation instructions. The devices may extend a max of 2 in. (51 mm) above the top surface of the concrete.
HILTI CONSTRUCTION CHEMICALS, DIV OF HILTI
INC — CP 680N-75/2.5", CP 680N-110/4", CP 680N-160/6", CP 680-P 2", CP 680-P 3", CP 680-P 4", CP 680-P 6"
4. Firestop Device* - Water Barrier Module — (Optional, Not Shown) - Nom 2", 3", 4" and 6" water barrier modules used in combination with the CP 680-P 2", CP 680-P 3", CP 680-P 4" and CP 680-P 6" devices, respectively, and supplied by device manufacturer. Module is threaded onto top of device. For W Rating with Water Barrier Module, pipe shall be installed from bottom of device.
HILTI CONSTRUCTION CHEMICALS, DIV OF HILTI INC — Water Barrier Module
4A. Firestop Device* - Top Seal Plug — (Optional, Not Shown) - Alternate to Water Barrier Module (Item 4). Top seal plug for use with CP 680-P 2" device and nom pipe, conduit or tubing size of 2 in. (51 mm) diam. Plug is friction fit into top of firestop device (Item 3) in accordance with the manufacturer's instructions. W Rating applies only to nom 2 in. (51 mm) diam copper pipe/tube in conjunction with 2" CPS Top Seal and CP 680-P 2" device.
HILTI CONSTRUCTION CHEMICALS, DIV OF HILTI INC — CPS Top Seal Plug
*Bearing the UL Classification Mark

Hilti Firestop Systems

Reproduced by HILTI, Inc. Courtesy of Underwriters Laboratories, Inc. February 27, 2008

C UL US

Page: 2 of 2

FA 1091

Storage Tank Water Heater Sizing Calculator

Developed by the Plan Review Unit of the Environmental Health Services Section

Facility Name:	BISHOPS					
Address:	SAN JOSE, CALIFORNIA					
EQUIPMENT						**GPH CALCULATED**
Enter the description, and number and size of compartments for each sink below	Description	Number of compartments	(inches) Length	Width	Depth	Gallons Per Hour (GPH)
Largest Sink #1						0
Sink #2						0
Sinks are calculated at 75% capacity					Total	0
Enter type of prep sink and number of sink compartments for each sink below	Type of prep sink (vegetable, meat, seafood)	Number of compartments				Gallons Per Hour (GPH)
Prep sink #1						0
Prep sinks are calculated at 5 gallons per compartment					Total	0
Enter the quantity of equipment below	Quantity					Gallons Per Hour (GPH)
Hand sinks	2					10
Showers	2					30
Mop sink	1					5
Clothes washer	1					6.8
Other Equipment						0
Enter a description and estimated gallon per hour (GPH) usage for other equipment below	Description	Estimated gallons per hour (GPH) usage				
Other Equipment						0
Other Equipment						0
Hand sinks and mop sinks are calculated at 5 GPH each, showers at 15 GPH each. Hose reels are calculated at 5 GPH, clothes washers at 6.8 GPH, other equipment at the usage entered					Total	51.8
Enter the make, model and Final Rinse Usage in gallons per hour (GPH) for dishmachines	Make	Model	Final Rinse Usage (GPH) Found in "Dishmachine Specs" sheet below or on manufacturer's spec sheet			Gallons Per Hour (GPH)
Dishmachine #1						0
Enter the quantity of pre-rinse units	Quantity					Gallons Per Hour (GPH)
Pre-rinse						0
Dishmachines are calculated at 70% of the final rinse usage specified by the manufacturer. Pre-rinses are calculated at 45 GPH					Total	0
Recovery Rate Needed (GPH):						**52**

PLUMBING WATER SUPPLY FIXTURE UNITS

CALCULATION ASSUMES 2-1/2" WATER LINE WITH METER SERVING THE BUILDING WITH 72 PSI STATIC PRESSURE.

130 WSFU FOR CYCLE BAR TENANT

UTILIZING THE 2013 CPC, TABLE 610.4:

1-1/2" LINE WITH 130 WSFU

REFER TO SHEET P1.0 FOR RISER AND FLOOR PLAN WITH WSFU AO EACH MAIN AND BRANCH WATER LINES.

BRANCH 1

A: 1 WC = 26 FU
B: 1 WC (26) + 1 SHO (2) = 28 FU
C: 1 WC (26) + 2 SHO (4) = 30 FU
D: 1 WC (26) + 2 SHO (4) + 1 UR (20) = 50 FU
E: 1 WC (26) + 2 SHO (4) + 1 UR (20) + 1 LAV (2) = 52 FU
F: 1 WC (26) + 2 SHO (4) + 1 UR (20) + 2 LAV (4) = 54 FU
G: 2 WC (52) + 2 SHO (4) + 1 UR (20) + 2 LAV (4) = 80 FU
H: 2 WC (52) + 3 SHO (6) + 1 UR (20) + 2 LAV (4) = 82 FU
I: 2 WC (52) + 4 SHO (8) + 1 UR (20) + 2 LAV (4) = 84 FU
J: 3 WC (78) + 4 SHO (8) + 1 UR (20) + 2 LAV (4) = 110 FU
K: 3 WC (78) + 4 SHO (8) + 1 UR (20) + 3 LAV (6) = 112 FU
L: 3 WC (78) + 4 SHO (8) + 1 UR (20) + 4 LAV (8) = 114 FU

BRANCH 2

A: 1 DF = 2 FU
B: 1 DF (2) + WS (2) = 4 FU
C: 1 DF (2) + WS (2) + 1 WASHER (10) = 14 FU
D: 1 DF (2) + WS (2) + 1 WASHER (10) + MS (2) = 16 FU

TOTAL: BRANCH 1 (116 FU) + BRANCH 2 (14 FU) = 130 WSFU

Water Service Calculation - Retail 8/29/2017 **Bishops - San Jose, CA**
F.U. = fixture Units **2012 California Plumbing Code**

	Quantity	Waste F.U. (per fixture)	Total Waste F.U.	Water Supply F.U. (per fixture)	Total Water Supply F.U.
Water Closet (Flush Valve)	2	6	12	40	80
Water Closet (Flush Tank)	0	6	0	5	0
Urinals	0	3	0	20	0
Lavatory / Handwash Sink	2	2	4	2	4
Sink (Bar)	0	2	0	2	0
Mop Sink	1	4	4	2	2
3-comp Sink	0	3	0	4	0
Pot Fill Sink	0	4	0	0	0
Showers	2	2	4	2	4
Pre-rinse Sink	0	4	0	2	0
Hose Bibb	0	0	0	0	0
Floor Drain	4	2	8	0	0
Floor Sink	0	1	0	0	0
Ice Machine	0	2	0	4	0
Dish Washer	0	10	0	10	0
Clothes Washer	1	10	10	10	10
Water Bar/Fountain	1	1	1	2	2
Total Fixture Units		Waste:	43	Supply:	102

USE 4" WASTE LINE

FOR FLUSH TANK - USE 1-1/2" DISTRIBUTION LINE
FOR FLUSH VALVE - USE 2" DISTRIBUTION LINE

Pipe Sizes based on UPC

Misc:	
1-1/4" trap	0
1-1/2" trap	0
2" trap	0
3" trap	0
4" trap	0

Sizing Table:

Pipe Size	1.25"	1.5"	2"	3"	4"	6"
Maximum Units (Waste)						
Horizontal	1	2	16	48	256	1380
Vertical	1	1	8	35	216	720

Water Sizing:

CITY, CA - 2" street service size, 1-1/2" building supply and branches.
2" building main, 1-1/2" valve & distribution branch services: up to 150' run to most remote fixture, 217 wsfu allowed.

PLUMBING MATERIALS

A. SANITARY PIPING:
(WHERE NOT OTHERWISE SPECIFIED THROUGHOUT THE DRAWING SET, WASTE, DRAIN AND VENT PIPING SHALL BE PER LOCAL CODE AND AUTHORITY HAVING JURISDICTION.)
1. UNDERSLAB DRAIN PIPING SHALL BE SCHEDULE 40 PVC.
2. VENT PIPING SHALL BE SCHEDULE 40 PVC. VENT PIPING ABOVE FLOOR 2" OR SMALLER MAY BE GALVANIZED STEEL.
3. CONDENSATE PIPING SHALL BE TYPE "L". HARD DRAWN COPPER TUBE WITH 95-5 TIN-ANTIMONY SOLDERED JOINTS AND WROUGHT COPPER FITTINGS WITH DIELECTRIC SEPARATION BETWEEN DISSIMILAR METALS. CONDENSATE PIPING BELOW ROOF DECK MAY BE PVC. PROVIDE SHARKBITE TRANSITION FROM PVC TO COPPER.
4. INSULATE ALL HORIZONTAL RUNS OF PIPING LOCATED IN CEILING SPACES OF TENANTS IN SPACES BELOW WHEN APPLICABLE. INSULATION TO BE AS SPECIFIED FOR WATER PIPING.
5. PROVIDE LINE-ITEM BID TO UTILIZE PVC, OBTAIN APPROVAL FROM INSPECTOR PRIOR TO INSTALLATION THAT PVC IS ALLOWED FOR THE SPECIFIC HVAC LAYOUT FOR THIS PROJECT.

B. POTABLE WATER PIPING
1. ALL HOT AND COLD WATER SUPPLY PIPING, WHERE ALLOWED BY A.H.J. AND OWNER SHALL BE CPVC OR PEX.
2. WATER PIPING IN CEILING SPACE AND WITHIN WALLS MAY BE TYPE 'L' COPPER OR PEX, ISNTALLED PER MANUFACTURER'S INSTRUCTIONS. PROVIDE SHARK-BITE TRANSITIONS, OR APPROVED EQUALS.
3. BELOW GRADE: TYPE "K", ANNEALED TEMPERED COPPER TUBE FOR PIPE SIZES 2 INCHES AND SMALLER. BRAZE ALL JOINTS.
4. WHERE APPLICABLE, TRANSITIONS BETWEEN COPPER AND PLASTIC PIPE SHALL BE MADE BY SHARKBITE OR SIMILAR TRANSITIONS, RATED FOR USE WITH SUCH MATERIALS AS ARE BEING USED.
5. ABS PIPE MAY BE USED IN LIEU OF PVC.

C. GAS PIPING
1. GAS LINES SHALL BE BLACK STEEL, SCHEDULE 40, ASTM A-120, WITH MALLEABLE THREADED FITTINGS FOR 2" AND SMALLER, AND WITH WELDED JOINTS FOR 2-1/2" AND LARGER.
2. GAS PIPING EXPOSED ON ROOF MUST BE PAINTED WITH RUST-INHIBITING PAINT.

**THIS MATERIALS LIST REPRESENTS THE MINIMUM SPECIFICATIONS SET FORTH BY THE MEP ENGINEER. CONTACT LANDLORD'S REPRESENTATIVE PRIOR TO BEGINNING CONSTRUCTION TO VERIFY IF THERE ARE ANY ADDITIONAL OR MORE STRINGENT REQUIREMENTS BEYOND THESE.

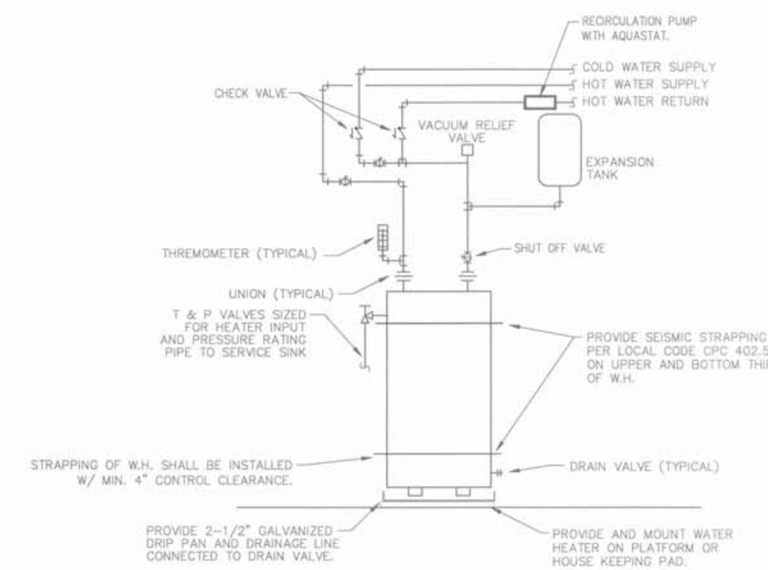

01 ELECTRIC WATER HEATER DETAIL
SCALE: NOT TO SCALE

WATER HEATER SCHEDULE (ELECTRIC, TANK-TYPE)

MARK	RECOVERY @55°F RISE	STORAGE GALLONS	LINING	MAXIMUM INPUT FUEL	CFH	HP	VOLTS/PH	KW	DESCRIPTION
W.H.	SEE CALC.	40	GLASS	ELEC.	--	--	120/208V	6	AO SMITH DEL-40, OR EQUAL. TWO 3.0 KW STAGES. 21.75" DIAMETER, 24" DRAIN PAN. 40 STORAGE GALLONS. GLASS LINING. 480 VOLTS 3 PHASE. 6 KW.

EXPANSION TANK SCHEDULE

MARK	TANK VOLUME	ACCEPTABLE VOLUME GALLON	HEIGHT	DIAMETER	ASTME CONST.	SERVES WATER HEATER	REMARKS
ET	5	2.3	14"	10"	NO	W.H.	WATTS NO. DETA-12

RECIRCULATION PUMP SCHEDULE

MARK	SERVICE	GPM	TOTAL HEAD FT.	MOTOR HP	ELECTRICAL VOLTS	PHASE	HERTZ	REMARKS
R.P.	36"-203"	2.2	3.9		115			GRUNDFOS UP10-16 BU SERIES. 20A/1P POWER, PROVIDE WITH AQUASTAT AND TIMER.

GHA
Architecture / Development
14901 Quorum Drive
Suite 300
Dallas Texas 75254
Ph: (972) 239-8884
Fax: (972) 239-5054

REGISTERED PROFESSIONAL ENGINEER PETER A. LEPTUCH E 19072 ELECTRICAL STATE OF CALIFORNIA 09/18/17

BISHOPS

BISHOPS - TENANT FINISHOUT
SOUTH MARKET APARTMENTS
1 SOUTH MARKET STREET
SAN JOSE, CA 95113

DO NOT SCALE DRAWINGS CONTRACTOR TO VERIFY ALL EXISTING CONDITIONS AND DIMENSIONS-NOTIFY ARCHITECT OF ANY DISCREPANCIES PRIOR TO BEGINNING CONSTRUCTION

NO. REVISION

REGISTERED PROFESSIONAL ENGINEER PETER A. LEPTUCH M 35700 MECHANICAL STATE OF CALIFORNIA 09/18/17

ISSUE

Peter A. Leptuch, P.E.
CA-M35700/CA-E19072
1236 Golden Eagle Ct
Aubrey, TX 76227
(940) 735-5127

ISSUE FOR PERMIT 09/18/17

PROJECT NUMBER
C170357

SHEET NUMBER
MEP2.0
ADDITIONAL MEP INFORMATION
DATE OF THIS PRINTING - 09/18/17

KEY NOTES BY SYMBOL '⬡'

1. MAINTAIN 10'-0" BETWEEN OUTSIDE AIR INTAKES AND ALL EXHAUST SOURCES (PLUMBING VENTS, EXHAUST FANS, COMBUSTION EXHAUST, ETC.), MECHANICAL CONTRACTOR SHALL PROVIDE OFFSETS AS NEEDED TO ENSURE EXHAUST FANS ARE 10'-0" AWAY FROM NEIGHBORING TENANT'S FRESH AIR INTAKES. PROVIDE OFFSETS AND ADJUST/RELOCATE EQUIPMENT AS NEEDED.
2. ROUTE 12" EXHAUST DUCT TO INLINE EXHAUST FAN NEAR STORE FRONT. THEN FROM FAN TO NEW EXTERIOR LOUVER (MATCH EXISTING LOUVER).
3. 4" DRYER VENT LINE ROUTED AS SHOWN TO EXTERIOR WALL LOUVER AS SHOWN. TERMINATE AT SECTIONED PORTION OF LOUVER. FURROUT WALL IF NECESSARY TO KEEP VENT WITHIN WALL.
4. NEW AHU SUSPENDED FROM CONCRETE DECK. REMOTE CONDENSING UNIT TO BE LOCATED IN PARKING GARAGE. COORDINATE WITH BUILDING ENGINEER FOR CONDENSING UNIT PLACEMENT. APPROXIMATE LOCATION BEHIND THE LEASE AND UP A LEVEL TO PARKING GARAGE. AN EXISTING REFRIGERANT PATH IS PROVIDED. VERIFY IN FIELD. PROVIDE LINE ITEM BID VALUE FOR LONG LINE SET.
5. PROVIDE 7-DAY PROGRAMMABLE THERMOSTAT, HONEYWELL VISION PRO 8000, AND AUTO CHANGEOVER AND RELATED WIRING TO CONTROL EACH UNIT. MOUNT T-STAT AT 48" AFF, SENSOR AT 96" AFF.
6. NEW IN-LINE EXHAUST FAN SUSPENDED FROM CONCRETE DECK

DRYER VENT CALCULATION

47'-0"	HORIZONTAL LENGTH
15'-0"	VERTICAL LENGTH
0	45 DEGREE ELBOWS (8.5' EACH)
15'-0"	90 DEGREE ELBOWS (5.0' EACH)
77'-0"	TOTAL DEVELOPED DUCT LENGTH

USE 4" GALVANIZED SHEET METAL DRYER VENT DUCT AND 4" MITERED ELBOWS. PROVIDE A DURABLE PLACARD AT LEAST 4" TALL AND 5" WIDE, AFFIXED PERMANENTLY ON THE WALL, CLOSE TO THE DRYER LOCATION. THE PLACARD SHALL LIST THE ACTUAL LENGTH OF THE INSTALLED DRYER DUCT EXHAUST VENT.

SAMPLE DRYER PLACARD

WARNING

CHECK THE MANUFACTURER'S INSTALLATION INSTRUCTIONS FOR ANY DOMESTIC DRYER THAT WILL BE INSTALLED AT THIS LOCATION. THE INSTALLATION INSTRUCTION SHOULD ALLOW THE DRYER TO BE CONNECTED TO AN EXHAUST DUCT (VENT) THAT IS ____ FEET.

AHU LOCATION, MIXING BOX CONFIGURATIONS (ON SPLIT SYSTEMS), RETURN AIR CONFIGURATIONS, ECONOMIZER CONFIGURATIONS, ETC. WILL VARY DEPENDING ON FIELD CONDITIONS, JOISTS, BEAMS, SPRINKLER PIPING, ETC. IT IS EXPECTED THAT THE MECHANICAL CONTRACTOR WILL MAKE MINOR ADJUSTMENTS TO BEST SUIT FIELD CONDITIONS.

SPLIT SYSTEM SCHEDULE (HEAT PUMP)

UNIT MARK	MANUFACTURER MODEL NUMBER	TONNAGE	COOL (B.T.U.)	SEER (EER)	HEAT (B.T.U)	HEAT (COP)	HSPF (IV)	HEAT (KW.)	CFM	OUTSIDE AIR(cfm)	S.P.	H.P.	VOLT/PHASE	MCA	MOCP	WEIGHT (LBS)	NOTES
AHU-1	LENNOX CBX27UH-036	3.0	-	-	-	-	-	5.0	1200	385	1.0	1.0	208/3 / 208/1	13.9 / 5.0	20.0 / 15.0	159	1-6
CU-1	LENNOX TPA036H4N41Y	3.0	34,800	15.2	32,800	3.72	8.70	-	-	-	-	-	208/3	12.2	20/3	202	1,2,3,6

NOTES:
1. PROVIDE WITH FACTORY TXV EXPANSION DEVICE.
2. SUSPEND AHU FROM STRUCTURE AND INSTALL CONDENSING UNITS IN PARKING LEVEL BEHIND SPACE.
3. ROOF MOUNTED EQUIPMENT WILL NEED TO BE SECURED TO STRUCTURE PER LOCAL REQUIREMENTS.
4. 5.0 KW ELECTRIC HEATER MODEL# ECB29-5CB. CONFIRM O.C.P WITH NAMEPLATE ON AHU AND ADJUST BREAKER/WIRE AS NEEDED, PRIOR TO INSTALL.
5. PROVIDE WITH ECONOMIZER WHERE REQUIRED PER LOCAL CODE.
6. AHRI REFERENCE # IS 9032383.

SPLIT SYSTEMS SHALL BE ORDERED/INSTALLED WITH ALL TYPICAL SPLIT SYSTEM COMPONENTS FOR A FULLY OPERATIONAL SYSTEM, INCLUDING BUT NOT LIMITED TO: (O.A. DUCT, BAROMETRIC RELIEF, REFRIGERANT LINES, SEPARATE DISCONNECTS, MAINTENANCE RECEPTACLE, HEAT (WHERE SCHEDULED, ELECTRIC, SEPARATE DISCONNECT IF NECESSARY, OR SUPPLEMENTAL DUCT HEATER), 6" HOUSEKEEPING PAD, CLEAR FLOOR SPACE WITH BOLLARDS IF NECESSARY FOR GROUND MOUNT, CONDENSATE OVERFLOW FLOAT SWITCH, DRAIN PANS, PRIMARY/SECONDARY OVERFLOW, APPROVED POINT OF DISCHARGE, SIDEWALL INTAKE LOUVER FOR O.A. WHERE ROOF INTAKES ARE PROHIBITED OR OTHERWISE NOT APPROPRIATE, BAROMETRIC RELIEF FOR O.A., ACCESS PANEL FOR AHU ABOVE CEILING, UNITS, VIBRATION ISOLATION, ACOUSTICAL DUCT INSULATION, DUCT DETECTORS, ETC.), AHU ECONOMIZER CONTROLLER, ACTUATORS, 3-POSITION DAMPERS, RELAYS, WIRING, ALL OF COMPATIBLE VOLTAGES.

CONTRACTOR NOTES:

IT IS THE RESPONSIBILITY OF THE CONTRACTOR TO NOTIFY THE ARCHITECT, LANDLORD OR TENANT OF ANY DISCREPANCIES ENCOUNTERED ON THE PLANS OR IN EXISTING CONDITIONS PRIOR TO COMMENCEMENT OF WORK. COORDINATE ROOF ACCESS WITH LANDLORD.

BIDDERS ARE TO VISIT THE SITE AND FAMILIARIZE THEMSELVES WITH EXISTING CONDITIONS AND SATISFY THEMSELVES AS TO THE NATURE AND SCOPE OF WORK. THE BASE BID SHALL REFLECT MODIFICATIONS TO SYSTEMS AND DEVICES AS REQUIRED BY STATE AND LOCAL CODES WHETHER INDICATED OR NOT ON CONTRACT DOCUMENTS. THE SUBMISSIONS OF A BID WILL BE EVIDENCE THAT SUCH AN EXAMINATION AND COMPLIANCE WITH GOVERNING CODES / REQUIREMENTS HAS BEEN MADE. LATER CLAIMS FOR LABOR, EQUIPMENT, OR MATERIALS REQUIRED OR FOR DIFFICULTIES ENCOUNTERED WHICH COULD HAVE BEEN FORESEEN, HAD AN EXAMINATION AND CODE REVIEW BEEN MADE, WILL NOT BE ALLOWED.

ANY EXISTING HVAC EQUIPMENT THAT IS BEING REUSED SHALL HAVE IT'S POWER (SERVICE OUTLET, HVAC UNIT POWER, DUCT DETECTOR, ETC.) MIGRATED TO THE NEW ELECTRICAL PANEL(S). REUSE DISCONNECTS WHERE CODE COMPLIANT. REPLACE WHEN IN POOR SHAPE, UNDERSIZED OR OTHERWISE NECESSARY. CIRCUIT TO OPEN BREAKERS IF CIRCUIT IS NOT CALLED OUT.

ALL SUPPLY DUCTWORK SHALL BE INTERNALLY INSULATED, DOUBLE-WALL METAL "SPIRAL" DUCT MAINS. SUPPLY BRANCHES SHALL BE RIGID METAL AND INTERNALLY INSULATED. SUPPLY REGISTERS AND TAPS SHALL BE INTERNALLY INSULATED WITH THERMAL BREAKS TO PREVENT "SWEATING". FLEX DUCT AND DUCT BOARD WILL NOT BE PERMITTED, EXCEPT FOR A 5'-0" OR LESS SEGMENT OF FLEX DUCT TO CONNECT TO DIFFUSERS ABOVE A LAY-IN GRID CEILING, WHICH SHALL BE FULLY CONCEALED FROM VIEW.

BISHOPS, CA NOTE:

THE LEVEL ABOVE HAS A 2-PIPE CONDENSER WATER SYSTEM. THIS SPACE IS NOT ELIGIBLE TO CONNECT INTO THAT SYSTEM.

SAN JOSE, CA NOTE:

THIS IS A MULTI-STORY BUILDING. NO EQUIPMENT WILL BE PLACED ON THE ROOF.

WHEN SPLIT SYSTEMS ARE USED, AND ECONOMIZERS ARE REQUIRED, FOR O.A. DAMPER CONTROLS, USE: ECONOMIZER SPEC: HONEYWELL W7215B1004 WITH TWO C7400A SENSORS FOR DIFFERENTIAL ENTHALPY CONTROL (TO RUN ECONOMIZER).

CONDENSATE LINE SIZES:

3/4"	UP TO 2 TONS CONNECTED.
1"	UP TO 5 TONS CONNECTED.
1-1/4"	UP TO 25 TONS CONNECTED.
1-1/2"	UP TO 50 TONS CONNECTED.
2"	UP TO 170 TONS CONNECTED.

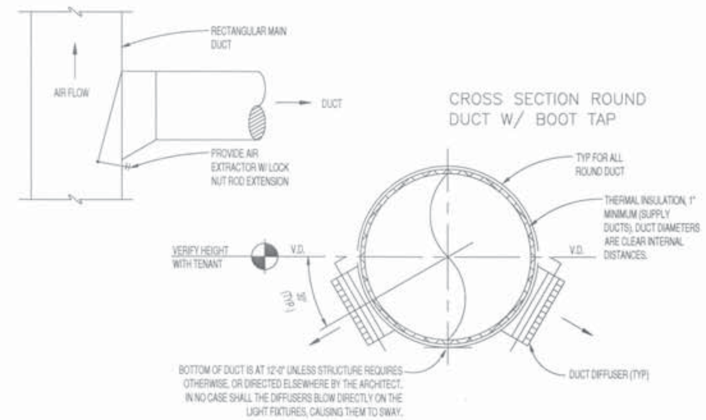

02 EXPOSED SPIRAL DUCT DIFFUSER TAP DETAIL
SCALE:NONE

EXHAUST FAN SCHEDULE (INLINE)

MARK	MANUFACTURER	MODEL	DRIVE	AIRFLOW (CFM)	EXT. SP (IN W.C.)	V, PH, HZ	MOTOR SIZE (HP)	SERVICE	APPROXIMATE WEIGHT (LBS)	INSTALL LOCATION	NOTES
EF 1	GREENHECK	SQ-95-VG	DIRECT	385	0.50"	115/1/60	1/6	RR, BARBER & UTILITY RM.	50	PLENUM	1,2

1. CONTROL TO BE INTERLOCKED WITH AHU/CU-1
2. PROVIDE WITH GRAVITY BACK DRAFT DAMPER.

ASHRAE 62.1 Ventilation Comparison 8/31/2017 San Jose, CA

Zone Identification — Standard Case: ASHRAE 62.1 - Table 403.3 Verification Rate Procedure — Design Case

Zone	Occupancy Category	Area (sf) (Az)	Table 6-1 People Outdoor Air Rate (cfm/person) (Rp)	Table 6-1 Area outdoor Air Rate (cfm/sf) (Ra)	Expected Occupant Density (#/1000 sf)	Zone Population (# persons) (Pz)	Breathing Zone Outdoor Air Flow (CFM) (Vbz)	From Table 6-2 Zone Air Distribution Effectiveness (Ez)	Zone Outdoor Air Flow (CFM) (Voz)	Zone Primary Air Flow Fraction (CFM) (Vpz)	Factor Zp= Voz/Vpz	From Table 6-3 System Ventilation Efficiency (Ev)	Outdoor Air Intake Flow (CFM) (Vot)	Total Outdoor Airflow provided by HVAC equip. (CFM)	Total Airflow provided by HVAC equip. (CFM)	Design % by which Outside Air Design Flow Exceeds Standard
Barber Shop	Barber Shop	566	7.5	0.06	25	14.15	140.1	0.8	175.1	1	175.1	1	175.1	250	600	42.8%
Back of Hous	Laundry Roo	117	5	0.12	10	1.17	19.9	0.8	24.9	1	24.863	1	24.9	20	50	-19.6%
Restroom	Restroom	52	0	0	0	0	0.0	0.8	0.0	1	0.000	1	0.0	0	50	
Lobby	Lobby	193	7.5	0.06	30	5.79	55.0	0.8	68.8	1	68.756	1	68.8	80	500	16.4%
	Total	928				21						Total (CFM):	268.7	375	1200	

*Lobby is open to barber areas.

$V_{bz} = R_p{*}P_z + R_a{*}A_z$

V_{ot} = Total airflow provided by the HVAC equipment (Outdoor + Recirculated).

$V_{oz} = V_{bz}/E_z$

$Z_p = V_{oz}/V_{pz}$

Barber Shop Required Exhaust =	283 CFM	as required by Table 6.4 minimum exhaust rates.
Restroom Required Exhaust =	50 CFM	as required by Table 6.4 minimum exhaust rates.
Mop Sink Required Exhaust =	50 CFM	as required by Table 6.4 minimum exhaust rates.
Total Exhaust Required =	383 CFM	

Terminology has been adopted from ASHRAE std 62.1-2010, refer to Chapter 6 of that code for additional terminology, equations, etc.

CONDUIT ACROSS WIDTH OF SPACE APPROX. 12" BELOW CONCRETE DECK. ROUTE DUCTWORK ABOVE CONDUIT.

03 EXISTING CONDITION PHOTO
SCALE:NONE

AIR DEVICE SCHEDULE

SYMBOL	TAG	MANUF.	CATALOG #	FIXTURE DESCRIPTION	NECK SIZE	REMARKS
⊠	A	TITUS	TMS	24x24 SUPPLY GRILLE/ 12x12 SUPPLY GRILLE	SEE PLAN	ALUMINUM, BORDER TYPE 1 IN GYP. BD. CLG. PAINTED BLACK TO MATCH CEILING WHERE CEILING IS NOT WHITE, REF ARCH. SHEETS.
◫	C	NAILOR	51EC	24x24 RETURN GRILLE/ 12x12 RETURN GRILLE	SEE PLAN	EGGCRATE, BORDER TYPE 1
⊏	D	NAILOR	61DV-0	SIDEWALL SUPPLY, 1/2" WIDTH, WHITE, PAINTED TO MATCH SPIRAL DUCT.	---	SURFACE MOUNT, EACH SHALL HAVE SADDLE-MOUNT FITTING WITH NECK VOLUME DAMPER. 18/6 U.N.O.

NOTE:
1. ALL GRILLES IN GYP BOARD CEILING SHALL BE ORDERED WITH INTEGRAL BALANCING DAMPERS.
2. PROVIDE RECTANGULAR TO ROUND ADAPTERS WHEREVER NECESSARY.
3. NOT ALL DEVICES USED ON ALL JOBS.
4. TRANSITION NECK SIZE ON SUPPLY AND RETURN AS NEEDED TO ENSURE SAME SIZE (WITHIN 2") SUPPLY AND RETURN REGISTERS FOR UNIFORM APPEARANCE.

AIR DEVICE NECK CHART

8"ø - 0 TO 180 CFM
10"ø - 185 TO 350 CFM
12"ø - 355 TO 550 CFM
14"ø - 555 TO 850 CFM
16"ø - 855 TO 1350 CFM
18"ø - 1360 TO 1750 CFM

**USE ABOVE SIZES UNLESS OTHERWISE INDICATED.

MECHANICAL SYMBOL LEGEND

SYMBOL	DESCRIPTION
Ⓣ	THERMOSTAT @ 48" AFF
Ⓓ	DUCT MOUNTED SMOKE DETECTOR
Ⓢ	REMOTE ROOM TEMPERATURE SENSOR AT 96" AFF
⊣	VOLUME DAMPER
M	MOTORIZED DAMPER WITH ACTUATOR
AHU	AIR HANDLING UNIT
EF	EXHAUST FAN
B	BAROMETRIC FLAP DAMPER

FIELD VERIFY LOCATION OF PLUMBING VTR, INSTALL AFTER ALL HVAC UNITS ARE IN PLACE TO ENSURE NO VENT IS WITHIN 10'-0" OF ANY FRESH AIR INTAKE AND THAT NO EXTRA / UNNECESSARY ROOF PENETRATIONS ARE MADE.

REFER ALSO TO SHEET MEP1.0 FOR MORE MECHANICAL NOTES

HVAC SUMMARY:

986 SQ FT.

3.0 TONS

328.6 SF/TON

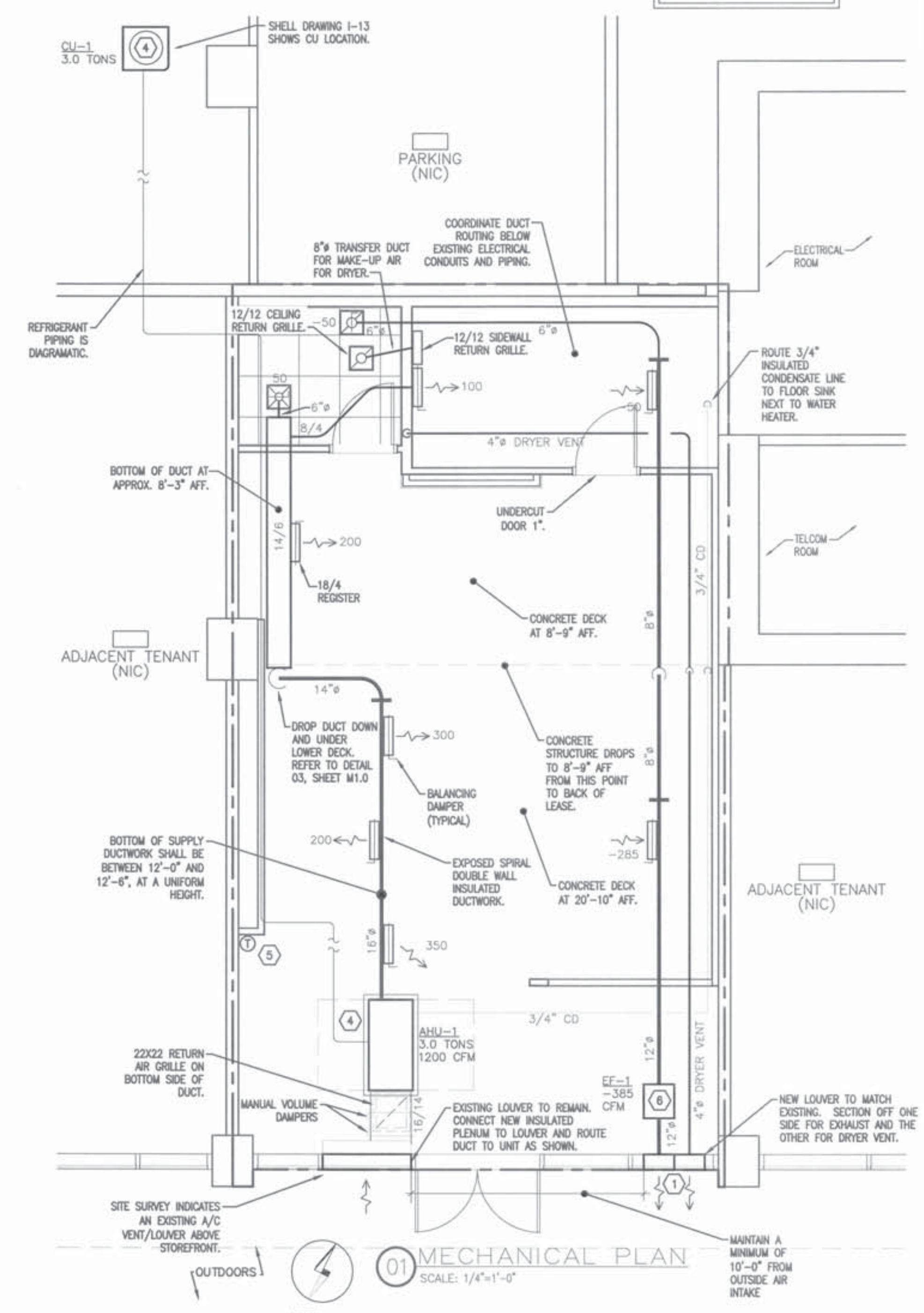

01 MECHANICAL PLAN
SCALE: 1/4"=1'-0"

GHA
Architecture / Development
14901 Quorum Drive
Suite 300
Dallas Texas 75254
Ph (972) 239-8884
Fax (972) 239-5054
PETER A. LEPTUCH REGISTERED PROFESSIONAL ENGINEER MECHANICAL M35700 STATE OF CALIFORNIA
09/18/17

BISHOPS

BISHOPS - TENANT FINISHOUT
SOUTH MARKET APARTMENTS
1 SOUTH MARKET STREET
SAN JOSE, CA 95113

DO NOT SCALE DRAWINGS CONTRACTOR TO VERIFY ALL EXISTING CONDITIONS AND DIMENSIONS-NOTIFY ARCHITECT OF ANY DISCREPANCIES PRIOR TO BEGINNING CONSTRUCTION

NO.	REVISION

ISSUE

Peter A. Leptuch, P.E.
CA-M35700/CA-E19072
1238 Golden Eagle Ct.
Aubrey, TX 76227
(940) 735-5127

ISSUE FOR PERMIT 09/18/17

PROJECT NUMBER C170357

SHEET NUMBER M1.0

MECHANICAL PLANS

DATE OF THIS PRINTING - 09/18/17

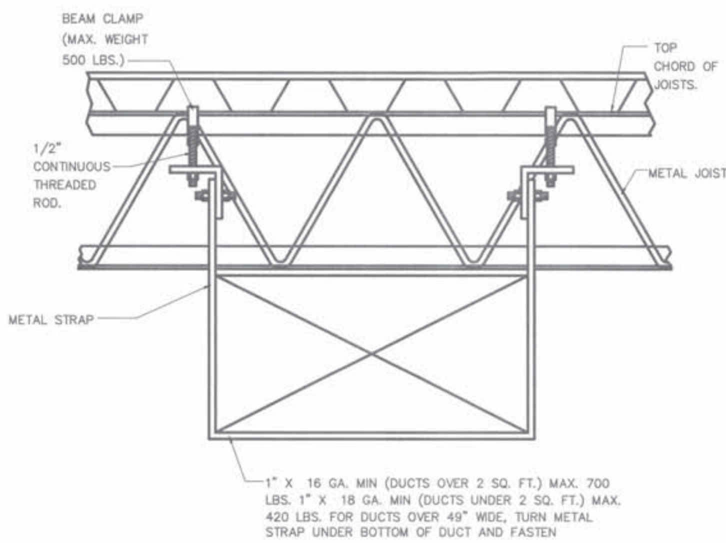

DUCTWORK SUPPORT DETAIL

NOT TO SCALE

MAX. SIDE INCHES	RECTANGULAR DUCTS MIN. GALV. SHT. GAUGE	ALUMINUM MIN. B & S GAUGE
THROUGH 12	26 (0.022 IN.)	24 (0.020 IN.)
13 THROUGH 30	24 (0.028 IN.)	22 (0.025 IN.)
31 THROUGH 54	22 (0.034 IN.)	20 (0.032 IN.)
55 THROUGH 84	20 (0.040 IN.)	18 (0.040 IN.)
OVER 84	18 (0.052 IN.)	16 (0.051 IN.)

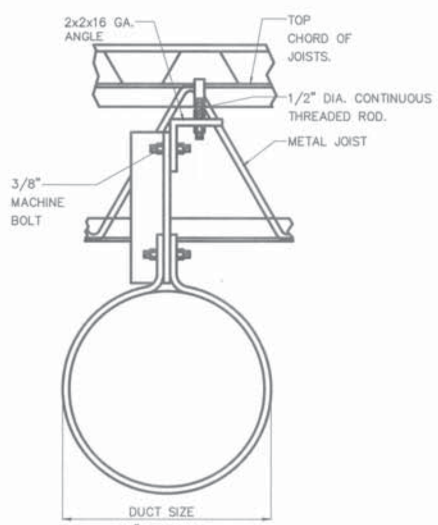

NOTE:
DISTANCE BETWEEN DUCT HANGERS SHALL BE IN ACCORDANCE WITH THE RULES OF THE AGENCIES HAVING JURISDICTION.

MAX WEIGHT PER FOOT = 16 LBS.

ROUND DUCT SUPPORT DETAIL

NOT TO SCALE

DIAMETER INCHES	SPIRAL SEAM DUCT STEEL MIN. GALV. SHT. GAUGE	ROUND DUCTS LONGITUDINAL SEAM DUCT STEEL MIN. GALV. SHT. GAUGE	FITTINGS STEEL MIN. GALV. SHT. GAUGE
THROUGH 12	28 (0.019 IN.)	26 (0.022 IN.)	26 (0.022 IN.)
13 THROUGH 18	26 (0.022 IN.)	24 (0.028 IN.)	24 (0.028 IN.)
19 THROUGH 28	24 (0.028 IN.)	22 (0.034 IN.)	22 (0.034 IN.)
29 THROUGH 36	22 (0.034 IN.)	20 (0.040 IN.)	20 (0.040 IN.)
37 THROUGH 52	20 (0.040 IN.)	18 (0.052 IN.)	18 (0.052 IN.)

01 DUCTWORK SUPPORT DETAIL

SCALE: 1/4"=1'-0"

TABLE 6-4: DUCT INSULATION SCHEDULE
2016 CALIFORNIA MECHANICAL CODE

DUCT LOCATION	INSULATION TYPES MECHANICALLY CODED	HEATING ZONE ?	INSULATION TYPES HEATING ONLY
ON ROOF ON EXTERIOR OF BUILDING	C, V² AND W	I II III	A AND W B AND W C AND W
ATTICS, GARAGES AND CRAWL SPACES	A AND V²	I II III	A A B
IN WALLS,¹ WITHIN FLOOR-CEILING SPACES¹	A AND V²	I II III	A B B
WITH THE CONDITIONED SPACE OR IN BESEMENTS; RETURN DUCTS IN AIR PLENUMS			
CEMENT SLAB OR WITHIN GROUND			

02 DUCT INSULATION AND SUPPORT

SCALE: 1/4"=1'-0"

TABLE 6-5: DUCT SUPPORT
PART 1 – VERTICAL DUCTS

MAXIMUM SIDE OF RECTANGULAR DUCT	METAL STRAP OR ANGLE BRACKET	MAXIMUM DIAMETER OF ROUND DUCTS	STRAPS
ON ROOF ON EXTERIOR OF BUILDING	C, V² AND W	I II III	A AND W B AND W C AND W
ATTICS, GARAGES AND CRAWL SPACES	A AND V²	I II III	A A B
IN WALLS,¹ WITHIN FLOOR-CEILING SPACES¹	A AND V²	I II III	A B B
WITH THE CONDITIONED SPACE OR IN BESEMENTS; RETURN DUCTS IN AIR PLENUMS			
CEMENT SLAB OR WITHIN GROUND			
CEMENT SLAB OR WITHIN GROUND			

NOTE: WHERE DUCTS ARE USED FOR BOTH HEATING AND COOLING, THE MINIMUM INSULATION SHALL BE AS REQUIRED FOR THE MOST RESTRICTIVE CONDITION.

1. HEATING DEGREE DAYS:
   - ZONE I — BELOW 4500 D.D.
   - ZONE II — 4501 TO 8000 D.D.
   - ZONE III — OVER 8000 D.D.
2. VAPOR RETARDERS SHALL BE INSTALLED ON SUPPLY DUCTS IN SPACES VENTED TO THE OUTSIDE IN GEOGRAPHIC AREAS WHERE THE SUMMER DEW POINT TEMPERATURE BASED ON THE 2-1/2% COLUMN OF DRY-BULB AND MEAN COINCIDENT WET-BULB TEMPERATURE EXCEEDS 60° DEG. F.
3. INSULATION MAY BE OMITTED ON THAT PORTION OF A DUCT WHICH IS LOCATED WITHIN A WALL OR FLOOR CEILING SPACE WHERE:
   a. BOTH SIDES OF THE SPACE ARE EXPOSED TO CONDITIONED AIR.
   b. THE SPACE IS NOT VENTILATED.
   c. THE SPACE IS NOT USED AS A RETURN PLENUM.
   d. THE SPACE IS NOT EXPOSED TO UNCONDITIONED AIR.
   CEILINGS WHICH FORM PLENUMS NEED NOT BE INSULATED.
4. INSULATION TYPES:

A. A MATERIAL WITH AN INSTALLED CONDUCTANCE OF 0.48 OR THE EQUIVALENT THERMAL RESISTANCE OF 2:1.
EXAMPLE OF MATERIALS CAPABLE OF MEETING THE ABOVE REQUIREMENTS:
1 INCH 60 LB/CU. FT. MINERAL FIBER, ROCK, SLAG OR GLASS BLANKETS.
½ INCH, 1.5 TO 3 LB/CU. FT. MINERAL FIBER BLANKET DUCT LINER.
½ INCH, 3 TO 10 LB/CU. FT. MINERAL FIBER BOARD.

B. A MATERIAL WITH AN INSTALLED CONDUCTANCE OF 0.24 OR THE EQUIVALENT THERMAL RESISTANCE OF 4:2.
EXAMPLE OF MATERIALS CAPABLE OF MEETING THE ABOVE REQUIREMENTS:
2 INCH 0.60 LB/CU. FT. MINERAL FIBER BLANKETS.
½ INCH, 1.5 TO 3 LB/CU. FT. MINERAL FIBER BLANKET DUCT LINER.
½ INCH, 3 TO 10 LB/CU. FT. MINERAL FIBER BOARD

C. A MATERIAL WITH AN INSTALLED CONDUCTANCE OF 0.16 OR THE EQUIVALENT THERMAL RESISTANCE OF 6:3.
EXAMPLE OF MATERIALS CAPABLE OF MEETING THE ABOVE REQUIREMENTS:
3 INCH 0.60 LB/CU. FT. MINERAL FIBER BLANKETS.
½ INCH, 1.5 TO 3 LB/CU. FT. MINERAL FIBER BLANKET DUCT LINER.
½ INCH, 3 TO 10 LB/CU. FT. MINERAL FIBER BOARD

D. VAPOR RETARDERS: MATERIAL WITH A PERM RATING NOT EXCEEDING 0.5 PERM. ALL JOINTS TO BE SEALED.
E. APPROVED WEATHER PROOF BARRIER.

THE EXAMPLE OF MATERIALS LISTED UNDER EACH TYPE IS NOT MEANT TO LIMIT OTHER AVAILABLE THICKNESS AND DENSITY COMBINATIONS WITH THE EQUIVALENT INSTALLED CONDUCTANCE OR RESISTANCE BASED ON THE INSULATION ONLY.

HVAC Load Calculation - Fitness Center	6/21/2017		Bishops - San Jose, CA		17.097
Cooling Load Analysis:		ASHRAE DESIGN:	DB = 92.3		
Sensible Heat:		Basis of Design: San Jose, CA	WB = 66.9		
		Design Indoor Temp	68 F		in Spin Studio
H_sensible, O.A. = 1.08 * cfm * delta T		H_sensible_OA =	10891.26 dT =	24.3	
H_sensible, lighting = watts * 3.413		H_sens_ltg=	4750.896		
H_sensible, people =250 * # people		H_sens_ppl =	4500		
H_sensible, walls = A*u*dT		H_sens_wall =	4774.737 (dT = 40F)		
H_sensible, floor = A*u*dT		H_sens_floor =	928 (dT = 1F)		
H_sensible, roof = A*u*dT		H_sens_roof =	464 (dT=50F)		
H_sensible, window conductance = A_glass*U*dT		H_sens_glass =	2643.3		
H_sensible, window transmittance = A_glass*SHGC*Et		H_sens_solar gain =	0		
H_latent, O.A. = 0.68 * q*delta w_grains		H_latent_OA =	-4091.9		
H_latent, people = 250 * # people		H_latent_ppl=	4500		

Lighting Load (watts)	1392 (from Comcheck/ T-24 / FlaCom)	
Occupant Load	18 (Auto Populate - from ASHRAE calculation)	
Grains O.A. =	57.7 <----- update per site	
Grains I.A. =	72.2 (72.2 is for saturated air at 58F)	
Outside Air, Ventilation =	415 (Auto Populate - from ASHRAE calculation)	
Roof / Floor Area =	928 (Auto Populate - from ASHRAE calculation)	
Wall Height - Average	16.2 <----- update per site	
Perimeter (unconditioned)	140 <----- update per site	
Wall Area =	2268	
Window Length =	18 <----- update per site	
Window Height =	8.9 <----- update per site	
Window Area =	160.2	
Shading Factor =	1 (0 = none, 1.0 = fully shaded)	
R-value Walls = (R_net) =	19 New Wall	
U-value Walls =	0.052632 Average Wall	
R-floor = (R_net) =	1	
U-floor	1	
R-roof = (R_net) =	100 Residential Above	
U-roof	0.01 Average Roof	
U-glass	0.55 (use 1.1 for 1-pane glass; use 0.55 for double pane glass, energy star windows can be 0.55 max.)	
SHGC	0.76 (use 0.76 for ordinary windows)	
Et = incident solar radiation	200 (assume peak daily, btu/hr p.s.f. Solar constant is 442 BTUH/hr at top of atmos, 317 at sfc.))	
Total Cooling Load:		**29360.29**
Space Load - Tonnage Required		**2.446691 tons**
Safety Factor (10%)		**32296.32**
Space Load - Recommended Tonnage		**2.69136 tons**

Mechanical contractor shall verify Existing HVAC Unit meets the above minimum requirement.

Square footage per ton - baseline (lower bound)	197.8104
Square footage per ton - baseline (upper bound)	379.2878

HVAC Load Calculation - Fitness Center	6/21/2017	Bishops - San Jose, CA	
Heating Load Analysis:		ASHRAE DESIGN:	DB = 35.7
Sensible Heat Loss:		Design Temp	70
H_sensible, O.A. = 1.08 * cfm * delta T		H_sensible_OA =	-15373.3 (dT = 57F)
H_sensible, O.A. = 1.08 * cfm * delta T		H_sensible_OA =	-11113.2 (dT = 57F)
H_sensible, walls = A*u*dT		H_sens_wall =	-4094.34 (dT = 57F)
H_sensible, floor = A*u*dT		H_sens_floor =	2784 (dT = 3F)
H_sensible, roof = A*u*dT		H_sens_roof =	-318.304 (dT = 57F)
H_sensible, window conductance = A_glass*U*dT		H_sens_glass =	-3022.17

Outside Air, ventilation =	415 (from ASHRAE calculation)	
Outside Air, intrusion =	300 (from open doors on windy winter days)	
Outside Air =	715	
Roof / Floor Area =	928 <----- update per site	
Wall Height - Average	16.2 <----- update per site	
Perimeter (unconditioned)	140 <----- update per site	
Wall Area =	2268	
Window length =	18 <----- update per site	
Window height =	8.9 <----- update per site	
Window Area =	160.2	
Shading Factor =	1 (0 = none, 1.0 = fully shaded)	
R-value Walls = (R_net) =	19 New Wall	
U-value Walls =	0.052631579 Average Wall	
R-floor = (R_net) =	1	
U-floor	1	
R-roof = (R_net) =	100 New Roof	
U-roof	0.01 Average Roof	
U-glass	0.55 (use 1.1 for 1-pane glass; use 0.55 for double pane glass, energy star windows can be 0.55 max.)	
Total Heating Load:		**-31137.3**
Safety Factor (25%)		**-38921.6 MBH**
Space Load - Tonnage Required		**11.40392 KW**

Mechanical contractor shall verify Existing HVAC Equipment meets the above minimum requirement.

Provide 180 mbh heat for quick heat-up in the mornings.

GHA
Architecture / Development
14901 Quorum Drive
Suite 300
Dallas Texas 75254
Ph: (972) 239-8884
Fax: (972) 239-5054

REGISTERED PROFESSIONAL ENGINEER PETER A. LEPTUCH M 35700 MECHANICAL STATE OF CALIFORNIA
09/18/17

BISHOPS
BISHOPS – TENANT FINISHOUT
SOUTH MARKET APARTMENTS
1 SOUTH MARKET STREET
SAN JOSE, CA 95113

DO NOT SCALE DRAWINGS CONTRACTOR TO VERIFY ALL EXISTING CONDITIONS AND DIMENSIONS–NOTIFY ARCHITECT OF ANY DISCREPANCIES PRIOR TO BEGINNING CONSTRUCTION

NO | REVISION

ISSUE

Peter A. Leptuch, P.E.
CA-M35700/CA-E19072
1236 Golden Eagle Ct.
Aubrey, TX 76227
(940) 735-5127

ISSUE FOR PERMIT 09/18/17

PROJECT NUMBER
C170357

SHEET NUMBER
M2.0
SEISMIC MECHANICAL DETAILS

DATE OF THIS PRINTING – 09/18/17

STATE OF CALIFORNIA
MECHANICAL SYSTEMS
CEC-NRCC-MCH-01-E (Revised 01/16)

CALIFORNIA ENERGY COMMISSION

CERTIFICATE OF COMPLIANCE	NRCC-MCH-01-E
Mechanical Systems	(Page 1 of 4)
Project Name: Bishops	Date Prepared: 9/12/2017

A. MECHANICAL COMPLIANCE DOCUMENTS & WORKSHEETS (check box if worksheet is included)

For detailed instructions on the use of this and all Energy Efficiency Standards compliance forms, refer to the 2016 Nonresidential Manual
Note: The Enforcement Agency may require all forms to be incorporated onto the building plans.

YES	NO	Comp. Doc./Worksheet #	Title
☑	☐	NRCC-MCH-01-E (Part 1 of 3)	Certificate of Compliance, Declaration. Required on plans for all submittals.
☑	☐	NRCC-MCH-01-E (Part 2 of 3)	Certificate of Compliance, Required Acceptance Tests (MCH-02-A to 11-A). Required on plans for all submittals.
☑	☐	NRCC-MCH-01-E (Part 3 of 3)	Certificate of Compliance, Required Acceptance Tests (MCH-12-A to 18-A). Required on plans where applicable.
☑	☐	NRCC-MCH-02-E (Part 1 of 2)	Mechanical Dry Equipment Summary is required for all submittals with Central Air Systems. It is optional on plans.
☑	☐	NRCC-MCH-02-E (Part 2 of 2)	Mechanical Wet Equipment Summary is required for all submittals with chilled water, hot water or condenser water systems. It is optional on plans.
☐	☑	NRCC-MCH-03-E	Mechanical Ventilation and Reheat is required for all submittals with multiple zone heating and cooling systems. It is optional on plans.
☐	☑	NRCC-MCH-07-E (Part 1 of 2)	Power Consumption of Fans. Required on plans where applicable
☐	☑	NRCC-MCH-07-E (Part 2 of 2)	Power Consumption of Fans, Declaration. Required on plans where applicable

STATE OF CALIFORNIA
MECHANICAL SYSTEMS
CEC-NRCC-MCH-01-E (Revised 01/16)

CALIFORNIA ENERGY COMMISSION

CERTIFICATE OF COMPLIANCE	NRCC-MCH-01-E
Mechanical Systems	(Page 2 of 4)
Project Name: Bishops	Date Prepared: 9/12/2017

B. MECHANICAL HVAC ACCEPTANCE FORMS (check box for required compliance documents)

Test Performed By:

Designer:
This compliance document is to be used by the designer and attached to the plans. Listed below are all the acceptance tests for HVAC systems. The designer is required to check the applicable boxes for all acceptance tests that apply and list all equipment that requires an acceptance test. All equipment of the same type that requires a test, list the equipment description and the number of systems.

Installing Contractor:
The contractor who installed the equipment is responsible to either conduct the acceptance test themselves or have a qualified entity run the test for them. If more than one person has responsibility for the acceptance testing, each person shall sign and submit the Certificate of Acceptance applicable to the portion of the construction or installation for which they are responsible.

Enforcement Agency:
Plancheck – The NRCC-MCH-01-E compliance document is not considered a completed document and is not to be accepted by the building department unless the correct boxes are checked. Inspector - Before occupancy permit is granted all newly installed process systems must be tested to ensure proper operations.

Test Description: Equipment Requiring Testing or Verification	# of Units	MCH-02-A Outdoor Air	MCH-03-A Single Zone Unitary	MCH-04-A Air Distribution Ducts	MCH-05-A Economizer Controls	MCH-06-A Demand Control Ventilation (DCV)	MCH-07-A Supply Fan VAV	MCH-08-A Valve Leakage Test	MCH-09-A Supply Water Temp. Reset	MCH-10-A Hydronic System Variable Flow Control	MCH-11-A Automatic Demand Shed Control
Lennox TPA036	1	☑	☑	☐	☑	☑	☐	☐	☐	☐	☐
		☐	☐	☐	☐	☐	☐	☐	☐	☐	☐
		☐	☐	☐	☐	☐	☐	☐	☐	☐	☐
		☐	☐	☐	☐	☐	☐	☐	☐	☐	☐
		☐	☐	☐	☐	☐	☐	☐	☐	☐	☐
		☐	☐	☐	☐	☐	☐	☐	☐	☐	☐
		☐	☐	☐	☐	☐	☐	☐	☐	☐	☐
		☐	☐	☐	☐	☐	☐	☐	☐	☐	☐
		☐	☐	☐	☐	☐	☐	☐	☐	☐	☐
		☐	☐	☐	☐	☐	☐	☐	☐	☐	☐

STATE OF CALIFORNIA
MECHANICAL SYSTEMS
CEC-NRCC-MCH-01-E (Revised 01/16)

CALIFORNIA ENERGY COMMISSION

CERTIFICATE OF COMPLIANCE	NRCC-MCH-01-E
Mechanical Systems	(Page 3 of 4)
Project Name: Bishops	Date Prepared: 9/12/2017

C. MECHANICAL HVAC ACCEPTANCE FORMS (check box for required compliance documents)

Test Performed By:

Designer:
This compliance document is to be used by the designer and attached to the plans. Listed below are all the acceptance tests for HVAC systems. The designer is required to check the applicable boxes for all acceptance tests that apply and list all equipment that requires an acceptance test. All equipment of the same type that requires a test, list the equipment description and the number of systems.

Installing Contractor:
The contractor who installed the equipment is responsible to either conduct the acceptance test themselves or have a qualified entity run the test for them. If more than one person has responsibility for the acceptance testing, each person shall sign and submit the Certificate of Acceptance applicable to the portion of the construction or installation for which they are responsible.

Enforcement Agency:
Plancheck – The NRCC-MCH-01-E compliance document is not considered a completed document and is not to be accepted by the building department unless the correct boxes are checked. Inspector - Before occupancy permit is granted all newly installed process systems must be tested to ensure proper operations.

Test Description: Equipment Requiring Testing or Verification	# of Units	MCH-12-A Fault Detection & Diagnostics for DX Units	MCH-13-A Automatic Fault Detection & Diagnostics for Air & Zone	MCH-14-A Distributed Energy Storage DX AC Systems	MCH-15-A Thermal Energy Storage (TES) Systems	MCH-16-A Supply Air Temperature Reset Controls	MCH-17-A Condenser Water Reset Controls	MCH-18-A ECMS
Lennox TPA036	1	☐	☐	☐	☐	☐	☐	☐
		☐	☐	☐	☐	☐	☐	☐
		☐	☐	☐	☐	☐	☐	☐
		☐	☐	☐	☐	☐	☐	☐
		☐	☐	☐	☐	☐	☐	☐
		☐	☐	☐	☐	☐	☐	☐
		☐	☐	☐	☐	☐	☐	☐
		☐	☐	☐	☐	☐	☐	☐
		☐	☐	☐	☐	☐	☐	☐
		☐	☐	☐	☐	☐	☐	☐

STATE OF CALIFORNIA
MECHANICAL SYSTEMS
CEC-NRCC-MCH-01-E (Revised 01/16)

CALIFORNIA ENERGY COMMISSION

CERTIFICATE OF COMPLIANCE	NRCC-MCH-01-E
Mechanical Systems	(Page 4 of 4)
Project Name: Bishops	Date Prepared: 9/12/2017

DOCUMENTATION AUTHOR'S DECLARATION STATEMENT

1. I certify that this Certificate of Compliance documentation is accurate and complete.

Documentation Author Name: Peter A. Leptuch, P.E.	Documentation Author Signature: [signature]
Company: Peter A. Leptuch, P.E.	Signature Date: 9/12/2017
Address: 1236 Golden Eagle Court	CEA/ HERS Certification Identification (if applicable):
City/State/Zip: Aubrey, TX, 76227	Phone: (940) 735-5127

RESPONSIBLE PERSON'S DECLARATION STATEMENT

I certify the following under penalty of perjury, under the laws of the State of California:

1. The information provided on this Certificate of Compliance is true and correct.
2. I am eligible under Division 3 of the Business and Professions Code to accept responsibility for the building design or system design identified on this Certificate of Compliance (responsible designer).
3. The energy features and performance specifications, materials, components, and manufactured devices for the building design or system design identified on this Certificate of Compliance conform to the requirements of Title 24, Part 1 and Part 6 of the California Code of Regulations.
4. The building design features or system design features identified on this Certificate of Compliance are consistent with the information provided on other applicable compliance documents, worksheets, calculations, plans and specifications submitted to the enforcement agency for approval with this building permit application.
5. I will ensure that a completed signed copy of this Certificate of Compliance shall be made available with the building permit(s) issued for the building, and made available to the enforcement agency for all applicable inspections. I understand that a completed signed copy of this Certificate of Compliance is required to be included with the documentation the builder provides to the building owner at occupancy.

Responsible Designer Name: Peter A. Leptuch	Responsible Designer Signature: [signature]
Company: Peter A. Leptuch, P.E.	Date Signed: 9/12/2017
Address: 1236 Golden Eagle Court	License: M35700
City/State/Zip: Aubrey, TX 76227	Phone: (940) 735-5127

STATE OF CALIFORNIA
HVAC DRY & WET SYSTEM REQUIREMENTS
CEC-NRCC-MCH-02-E (Revised 01/16)

CALIFORNIA ENERGY COMMISSION

CERTIFICATE OF COMPLIANCE	NRCC-MCH-02-E
HVAC Dry & Wet System Requirements	(Page 1 of 3)
Project Name: Bishops	Date Prepared: 9/12/2017

A. Equipment Tags and System Description[1] – Dry Systems		HP-1		
MANDATORY MEASURES	*T-24 Sections*	*Reference to the Requirements in the Contract Documents*[2]		
Heating Equipment Efficiency[3]	110.1 or 110.2(a)			
Cooling Equipment Efficiency[3]	110.1 or 110.2(a)			
HVAC or Heat Pump Thermostats	110.2(b), 110.2(c)			
Furnace Standby Loss Control	110.2(d)			
Low Leakage AHUs	110.2(f)			
Ventilation[4]	120.1(b)			
Demand Control Ventilation[5]	120.1(c)4			
Occupant Sensor Ventilation Control[6]	120.1(c)5, 120.2(e)3			
Shutoff and Reset Controls[7]	120.2(e)			
Outdoor Air and Exhaust Damper Control	120.2(f)			
Isolation Zones	120.2(g)			
Automatic Demand Shed Controls	120.2(h)			
Economizer FDD	120.2(i)			
Duct Insulation	120.4			
PRESCRIPTIVE MEASURES				
Equipment is sized in conformance with 140.4(a & b)	140.4(a & b)	Y Y/N	Y/N	Y/N
Supply Fan Pressure Control	140.4(c)			
Simultaneous Heat/Cool[8]	140.4(d)			
Economizer	140.4(e)			
Heat and Cool Air Supply Reset	140.4(f)			
Electric Resistance Heating[9]	140.4(g)			
Duct Leakage Sealing and Testing[10]	140.4(l)			

Notes:
1. Provide equipment tags (e.g. AHU 1 to 10) and system description (e.g. Single Duct VAV reheat) as appropriate. Multiple units with common requirements can be grouped together.
2. Provide references to plans (i.e. Drawing Sheet Numbers) and/or specifications (including Section name/number and relevant paragraphs) where each requirement is specified. Enter "N/A" if the requirement is not applicable to this system.
3. The referenced plans and specifications must include all of the following information: equipment tag, equipment nominal capacity, Title 24 minimum efficiency requirements, and actual rated equipment efficiencies. Where multiple efficiency requirements are applicable (e.g. full- and part-load) include all. Where appliance standards apply (110.1), identify where equipment is required to be listed per Title 20 1601 et seq.
4. Identify where the ventilation requirements are documented for each central HVAC system. Include references to both central unit schedules and sequences of operation. If one or more spaces is naturally ventilated identify where this is documented in the plans and specifications. Multiple zone central air systems must also provide a MCH-03-E compliance document.
5. If one or more spaces has demand controlled ventilation identify where it is specified including the sensor specifications and the sequence of operation.
6. If one or more space has occupant sensor ventilation control identify where it is specified including the sensor specifications and the sequence of operation
7. If the system is DDC identify the sequences for the system start/stop, optimal start, setback (if required) and setup (if required). For all systems identify the specification for the thermostats and time clocks (if applicable).
8. Identify where the heating, cooling and deadband airflows are scheduled for this system. Include a reference to the specification of the zone controls. Provide a MCH-03-E compliance document.
9. Enter N/A if there is no electric heating. If the system has electric heating indicate which exception to 140.4(g) applies.
10. If duct leakage sealing and testing is required, a MCH-04-A compliance document must be submitted.

STATE OF CALIFORNIA
HVAC DRY & WET SYSTEM REQUIREMENTS
CEC-NRCC-MCH-02-E (Revised 01/16)

CALIFORNIA ENERGY COMMISSION

CERTIFICATE OF COMPLIANCE	NRCC-MCH-02-E
HVAC Dry & Wet System Requirements	(Page 2 of 3)
Project Name: Bishops	Date Prepared: 9/12/2017

B. Equipment Tags and System Description[1] – Wet Systems				
MANDATORY MEASURES	*T-24 Sections*	*Reference to the Requirements in the Contract Documents*[2]		
Heating Hot Water Equipment Efficiency[3]	110.1			
Cooling Chilled and Condenser Water Equipment Efficiency[3]	110.1, 140.4(i)			
Open and Closed Circuit Cooling Towers conductivity or flow-based controls	110.2(e) 1			
Open and Closed Circuit Cooling Towers Maximum Achievable Cycles of Concentration (LSI)[4]	110.2(e) 2			
Open and Closed Circuit Cooling Towers Flow Meter with analog output	110.2(e) 3			
Open and Closed Circuit Cooling Towers Overflow Alarm	110.2(e) 4			
Open and Closed Circuit Cooling Towers Efficient Drift Eliminators	110.2(e) 5			
Pipe Insulation	120.3			
PRESCRIPTIVE MEASURES				
Cooling Tower Fan Controls	140.4(h)2, 140.4(h)5	Y/N	Y/N	Y/N
Cooling Tower Flow Controls	140.4(h)3			
Centrifugal Fan Cooling Towers[4]	140.4(h)4			
Air-Cooled Chiller Limitation[5]	140.4(j)			
Variable Flow System Design	140.4(k)			
Chiller and Boiler Isolation	140.4(k)			
CHW and HHW Reset Controls	140.4(k)			
WLHP Isolation Valves	140.4(k)			
VSD on CHW, CW & WLHP Pumps >5HP	140.4(k)			
DP Sensor Location	140.4(k)			

Notes:
1. Provide equipment tags (e.g. CH 1 to 3) or system description (e.g. CHW loop) as appropriate. Multiple units with common requirements can be grouped together.
2. Provide references to plans (i.e. Drawing Sheet Numbers) and/or specifications (including Section name/number and relevant paragraphs) where each requirement is specified. Enter "N/A" if the requirement is not applicable to this system.
3. The referenced plans and specifications must include all of the following information: equipment tag, equipment nominal capacity, Title 24 minimum efficiency requirements, and actual rated equipment efficiencies. Where multiple efficiency requirements are applicable (e.g. full- and part-load) include all. For chillers operating at non-standard efficiencies provide the Kadj values. For chillers also note whether the efficiencies are Path A or Path B.
4. Identify if cooling towers have propeller fans. If towers use centrifugal fans document which exception is used.
5. If air-cooled chillers are used, document which exceptions have been used to comply with 140.4(j) and the total installed design capacity of the air-cooled chillers in the chilled water plant.
6. Identify the existence of a completed MCH-06-E when open or closed circuit cooling towers are specified to be installed, otherwise enter "N/A".

GHA
Architecture / Development
14901 Quorum Drive
Suite 300
Dallas Texas 75254
Ph: (972) 239-8884
Fax: (972) 239-5054

PETER A. LEPTUCH REGISTERED PROFESSIONAL ENGINEER MECHANICAL M35700 CALIFORNIA

09/18/17

BISHOPS

BISHOPS – TENANT FINISHOUT
SOUTH MARKET APARTMENTS
1 SOUTH MARKET STREET
SAN JOSE, CA 95113

DO NOT SCALE DRAWINGS CONTRACTOR TO VERIFY ALL EXISTING CONDITIONS AND DIMENSIONS–NOTIFY ARCHITECT OF ANY DISCREPANCIES PRIOR TO BEGINNING CONSTRUCTION

NO	REVISION

ISSUE

Peter A. Leptuch, P.E.
CA-M35700/CA-E19072
1236 Golden Eagle Ct
Aubrey, TX 76227
(940) 735-5127

ISSUE FOR PERMIT 09/18/17

PROJECT NUMBER
C170357

SHEET NUMBER
M2.1
MECHANICAL
TITLE 24
DATE OF THIS PRINTING – 09/18/17

STATE OF CALIFORNIA
HVAC SYSTEM REQUIREMENTS
CEC-NRCC-MCH-02-E (Revised 06/14) — CALIFORNIA ENERGY COMMISSION

CERTIFICATE OF COMPLIANCE	NRCC-MCH-02-E
HVAC Wet System Requirements	(Page 3 of 3)
Project Name: Bishops	Date Prepared: 9/12/2017

DOCUMENTATION AUTHOR'S DECLARATION STATEMENT

1. I certify that this Certificate of Compliance documentation is accurate and complete.

Documentation Author Name:	Peter A. Leptuch, P.E.	Documentation Author Signature:	
Company:	Peter A. Leptuch, P.E.	Signature Date:	9/12/2017
Address:	1236 Golden Eagle Court	CEA/ HERS Certification Identification (if applicable):	
City/State/Zip:	Aubrey, TX, 76227	Phone:	(940) 735-5127

RESPONSIBLE PERSON'S DECLARATION STATEMENT

I certify the following under penalty of perjury, under the laws of the State of California:
1. The information provided on this Certificate of Compliance is true and correct.
2. I am eligible under Division 3 of the Business and Professions Code to accept responsibility for the building design or system design identified on this Certificate of Compliance (responsible designer).
3. The energy features and performance specifications, materials, components, and manufactured devices for the building design or system design identified on this Certificate of Compliance conform to the requirements of Title 24, Part 1 and Part 6 of the California Code of Regulations.
4. The building design features or system design features identified on this Certificate of Compliance are consistent with the information provided on other applicable compliance documents, worksheets, calculations, plans and specifications submitted to the enforcement agency for approval with this building permit application.
5. I will ensure that a completed signed copy of this Certificate of Compliance shall be made available with the building permit(s) issued for the building, and made available to the enforcement agency for all applicable inspections. I understand that a completed signed copy of this Certificate of Compliance is required to be included with the documentation the builder provides to the building owner at occupancy.

Responsible Designer Name:	Peter A. Leptuch	Responsible Designer Signature:	
Company:	Peter A. Leptuch, P.E.	Date Signed:	9/12/2017
Address:	1236 Golden Eagle Court	License:	M35700
City/State/Zip:	Aubrey, TX 76227	Phone:	(940) 735-5127

STATE OF CALIFORNIA
REQUIRED ACCEPTANCE TESTS
CEC-NRCC-MCH-04-E (Revised 01/16) — CALIFORNIA ENERGY COMMISSION

CERTIFICATE OF COMPLIANCE	NRCC-MCH-04-E
Required Acceptance Tests	(Page 1 of 3)
Project Name: Bishops	Date Prepared: 9/12/2017

A. MECHANICAL COMPLIANCE FORMS & WORKSHEETS
(indicate if worksheet is included)

For detailed instructions on the use of this and all Energy Standards compliance documents, refer to the 2016 Nonresidential Manual
Note: The Enforcement Agency may require all compliance documents to be incorporated onto the building plans. The NRCC-MCH-04-E and NRCC-MECH-05-E are alternative compliance documents to NRCC-MCH-01-E, NRCC-MCH-02-E and NRCC-MCH-03-E for projects using only single zone packaged HVAC systems.

YES	NO	Form	Title
✓		NRCC-MCH-04-E (1 of 2)	Certificate of Compliance. Required on plans when used.
✓		NRCC-MCH-04-E (2 of 2)	Mechanical Acceptance Tests. Required on plans when used.
✓		NRCC-MCH-05-E (1 of 2)	HVAC Prescriptive Requirements. It is required on plans when used.
✓		NRCC-MCH-05-E (2 of 2)	Mechanical SWH Equipment Summary is required for all submittals with service water heating, pools or spas. It is required on plans where applicable.

STATE OF CALIFORNIA
REQUIRED ACCEPTANCE TESTS
CEC-NRCC-MCH-04-E (Revised 01/16) — CALIFORNIA ENERGY COMMISSION

CERTIFICATE OF COMPLIANCE	NRCC-MCH-04-E
Required Acceptance Tests	(Page 2 of 3)
Project Name: Bishops	Date Prepared: 9/12/2017

Designer:
This compliance document is to be used by the designer and attached to the plans. Listed below are all the acceptance tests for mechanical systems. The designer is required to check the applicable boxes by all acceptance tests that apply and list all equipment that require an acceptance test. If all equipment of a certain type requires a test, list the equipment description and the number of systems. The NA number designates the Section in the Appendix of the Nonresidential Reference Appendices Manual that describes the test. Since this compliance document will be part of the plans, completion of this section will allow the responsible party to budget for the scope of work appropriately.

Enforcement Agency:
Systems Acceptance. Before occupancy permit is granted for a newly constructed building or space, or a new space-conditioning system serving a building or space is operated for normal use, all control devices serving the building or space shall be certified as meeting the Acceptance Requirements for Code Compliance.

Systems Acceptance. Before occupancy permit is granted. All newly installed HVAC equipment must be tested using the Acceptance Requirements.
The NRCC-MCH-04-E compliance document is not considered a completed document and is not to be accepted by the building department unless the correct boxes are checked. The equipment requiring testing, person performing the test (Example: HVAC installer, TAB contractor, controls contractor, PE in charge of project) and what Acceptance test must be conducted. The following checked-off forms are required for ALL newly installed and replaced equipment. In addition a Certificate of Acceptance documents shall be submitted to the building department that certifies plans, specifications, installation certificates, and operating and maintenance information meet the requirements of Section 10-103(b) and Title 24 Part 6. The building inspector must receive the properly filled out and signed compliance documents before the building can receive final occupancy.

Test Description	MCH-02-A	MCH-03-A	MCH-04-A	MCH-05-A	MCH-06-A	MCH-07-A	MCH-11-A	MCH-12-A	MCH-14-A	MCH-18-A	Test Performed By:
Equipment Requiring Testing or Verification	# of Units	Outdoor Air	Single Zone Unitary	Air Distribution Ducts	Economizer Controls	Demand Control Ventilation (DCV)	Supply Fan VAV	Automatic Demand Shed Control	FDD for Packaged DX Units	Distributed Energy Storage DX AC Systems	Energy Management Control System	
Lennox TPA	1	✓	✓		✓	✓						

STATE OF CALIFORNIA
REQUIRED ACCEPTANCE TESTS
CEC-NRCC-MCH-04-E (Revised 01/16) — CALIFORNIA ENERGY COMMISSION

CERTIFICATE OF COMPLIANCE	NRCC-MCH-04-E
Required Acceptance Tests	(Page 3 of 3)
Project Name: Bishops	Date Prepared: 9/12/2017

DOCUMENTATION AUTHOR'S DECLARATION STATEMENT

1. I certify that this Certificate of Compliance documentation is accurate and complete.

Documentation Author Name:	Peter A. Leptuch, P.E.	Documentation Author Signature:	
Company:	Peter A. Leptuch, P.E.	Signature Date:	9/12/2017
Address:	1236 Golden Eagle Court	CEA/ HERS Certification Identification (if applicable):	
City/State/Zip:	Aubrey, TX, 76227	Phone:	(940) 735-5127

RESPONSIBLE PERSON'S DECLARATION STATEMENT

I certify the following under penalty of perjury, under the laws of the State of California:
1. The information provided on this Certificate of Compliance is true and correct.
2. I am eligible under Division 3 of the Business and Professions Code to accept responsibility for the building design or system design identified on this Certificate of Compliance (responsible designer).
3. The energy features and performance specifications, materials, components, and manufactured devices for the building design or system design identified on this Certificate of Compliance conform to the requirements of Title 24, Part 1 and Part 6 of the California Code of Regulations.
4. The building design features or system design features identified on this Certificate of Compliance are consistent with the information provided on other applicable compliance documents, worksheets, calculations, plans and specifications submitted to the enforcement agency for approval with this building permit application.
5. I will ensure that a completed signed copy of this Certificate of Compliance shall be made available with the building permit(s) issued for the building, and made available to the enforcement agency for all applicable inspections. I understand that a completed signed copy of this Certificate of Compliance is required to be included with the documentation the builder provides to the building owner at occupancy.

Responsible Designer Name:	Peter A. Leptuch	Responsible Designer Signature:	
Company:	Peter A. Leptuch, P.E.	Date Signed:	9/12/2017
Address:	1236 Golden Eagle Court	License:	M35700
City/State/Zip:	Aubrey, TX 76227	Phone:	(940) 735-5127

STATE OF CALIFORNIA
REQUIREMENTS FOR PACKAGED SINGLE ZONE UNITS
CEC-NRCC-MCH-05-E (Revised 01/16) — CALIFORNIA ENERGY COMMISSION

CERTIFICATE OF COMPLIANCE	NRCC-MCH-05-E
Requirements for Packaged Single-Zone Units	(Page 1 of 2)
Project Name: Bishops	Date Prepared: 9/12/2017

Equipment Tag(s)[1]	HP-1						
MANDATORY MEASURES	*T-24 Sections*	*Requirement[2]*	*As Scheduled[3]*	*Requirement[2]*	*As Scheduled[3]*	*Requirement[2]*	*As Scheduled[3]*
Heating Equipment Efficiency[4]	110.1 or 110.2(a)	7.70 HSPF	8.00 HSPF				
Cooling Equipment Efficiency[5]	110.1 or 110.2(a)	13 SEER	13.0 SEER / 10				
Thermostat[6]	110.2(b), 110.2(c)	Setback	Setback				
Furnace Standby Loss Control[7]	110.2(d)	n/a					
Low Leakage AHU	110.2(f)	NR	none				
Ventilation	120.1(b)	606	150				
Demand Control Ventilation[8]	120.1(c)4	NR	Yes				
Occupant Sensor Ventilation Control[8]	120.1(c)5, 120.2(e)3						
Shutoff and Reset Controls[9]	120.2(e)	Req	Programmable				
Outdoor Air and Exhaust Damper Control	120.2(f)	Req	Auto				
Automatic Demand Shed Controls	120.2(h)	NR	none				
Economizer FDD	120.2(i)	NR					
Duct Insulation	120.4	n/a	none				
PRESCRIPTIVE MEASURES							
Equipment is sized in conformance with 140.4 (a & b)	140.4(a & b)	35,711 Btu/hr 69,577 Btu/hr	23,134 Btu/hr 17,174 Btu/hr				
Economizer	140.4(e)	NR	Diff. Temp (inte				
Electric Resistance Heating[10]	140.4(g)	No	No				
Duct Leakage Sealing and Testing[11]	140.4(l)	NR	No				

Notes:
1. *Provide equipment tags (e.g. ACE or ACL to 10). Multiple units of the same make and model with the same application and accessories can be grouped together.*
2. *Enter the following information as appropriate: Unit Manufacturer; Unit Model Number (including all accessories). Description of the unit (e.g. gas pack or heat pump; rated heating capacity (enter "N/A" if no heating); and, rated cooling capacity (enter "N/A" if no cooling). For unit capacities include the units (e.g. kBtuh or tons).*
3. *For each requirement, enter the minimum requirement from the Standard in the left column (under "Standard Requirement"). In the right column (under "As Scheduled") enter the value for the units as specified.*
4. *Where there is more than one requirement (e.g. full and part load efficiency) enter both with the appropriate labels (e.g. COP and IEER).*
5. *In the left column identify the thermostatic requirements from the standard (e.g. programmable setback thermostat or heat pump with electric heat). In the right column indicate the capabilities of the thermostat as scheduled.*
6. *If the unit has a furnace which is rated at ≥225,000 Btuh of capacity, indicate the rated standby loss and ignition source (e.g. HI). If there is no furnace or the unit is rated for <225,000 Btuh indicate "N/A".*
7. *In the left column, enter both the required ventilation value from Table 120.1A and for the number of occupants times 15 cfm/person. In the right column enter the actual minimum ventilation as scheduled. If the space is naturally ventilated enter "N/A" in the left column and "the space is naturally ventilated" in the right column.*
8. *If the space is required to have either DCV or Occupant Sensor Ventilation Control indicate "required" in the left column (otherwise indicate "N/A" in the left column). If either DCV or Occupant Sensor Ventilation Control is provided indicate "provided" in the right column (otherwise indicate "N/A" in the right column)*
9. *In the left column indicate the required time controls from the standard. In the right column identify the device that provides this functionality (e.g. EMCS or programmable timeclock).*
10. *Enter N/A if there is no electric heating. If the system has electric heating indicate which exception to 140.4(g) applies.*
11. *If duct leakage sealing and testing is required, a **MCH-04-A** compliance document must be submitted.*

STATE OF CALIFORNIA
REQUIREMENTS FOR PACKAGED SINGLE ZONE UNITS
CEC-NRCC-MCH-05-E (Revised 01/16) — CALIFORNIA ENERGY COMMISSION

CERTIFICATE OF COMPLIANCE	NRCC-MCH-05-E
Requirements for Packaged Single-Zone Units	(Page 2 of 2)
Project Name: Bishops	Date Prepared: 9/12/2017

DOCUMENTATION AUTHOR'S DECLARATION STATEMENT

1. I certify that this Certificate of Compliance documentation is accurate and complete.

Documentation Author Name:	Peter A. Leptuch, P.E.	Documentation Author Signature:	
Company:	Peter A. Leptuch, P.E.	Signature Date:	9/12/2017
Address:	1236 Golden Eagle Court	CEA/HERS Certification Identification (if applicable):	
City/State/Zip:	Aubrey, TX, 76227	Phone:	(940) 735-5127

RESPONSIBLE PERSON'S DECLARATION STATEMENT

I certify the following under penalty of perjury, under the laws of the State of California:
1. The information provided on this Certificate of Compliance is true and correct.
2. I am eligible under Division 3 of the Business and Professions Code to accept responsibility for the building design or system design identified on this Certificate of Compliance (responsible designer).
3. The energy features and performance specifications, materials, components, and manufactured devices for the building design or system design identified on this Certificate of Compliance conform to the requirements of Title 24, Part 1 and Part 6 of the California Code of Regulations.
4. The building design features or system design features identified on this Certificate of Compliance are consistent with the information provided on other applicable compliance documents, worksheets, calculations, plans and specifications submitted to the enforcement agency for approval with this building permit application.
5. I will ensure that a completed signed copy of this Certificate of Compliance shall be made available with the building permit(s) issued for the building, and made available to the enforcement agency for all applicable inspections. I understand that a completed signed copy of this Certificate of Compliance is required to be included with the documentation the builder provides to the building owner at occupancy.

Responsible Designer Name:	Peter A. Leptuch	Responsible Designer Signature:	
Company:	Peter A. Leptuch, P.E.	Date Signed:	9/12/2017
Address:	1236 Golden Eagle Court	License:	M35700
City/State/Zip:	Aubrey, TX 76227	Phone:	(940) 735-5127

GHA
Architecture / Development
14901 Quorum Drive
Suite 300
Dallas Texas 75254
Ph: (972) 239-3884
Fax: (972) 239-5054

REGISTERED PROFESSIONAL ENGINEER — PETER A. LEPTUCH — M 35700 — TEXAS
09/18/17

BISHOPS
BISHOPS – TENANT FINISHOUT
SOUTH MARKET APARTMENTS
1 SOUTH MARKET STREET
SAN JOSE, CA 95113

DO NOT SCALE DRAWINGS
CONTRACTOR TO VERIFY ALL EXISTING CONDITIONS AND DIMENSIONS–NOTIFY ARCHITECT OF ANY DISCREPANCIES PRIOR TO BEGINNING CONSTRUCTION

NO | REVISION

ISSUE

Peter A. Leptuch, P.E.
CA-M35700/TX-E8072
1236 Golden Eagle Ct.
Aubrey, TX 76227
(940) 735-5127
REGISTERED PROFESSIONAL ENGINEER — STATE OF TEXAS

ISSUE FOR PERMIT 09/18/17

PROJECT NUMBER
C170357

SHEET NUMBER
M2.2
MECHANICAL
TITLE 24
DATE OF THIS PRINTING – 09/18/17

STATE OF CALIFORNIA

WATER HEATING SYSTEM GENERAL INFORMATION

CEC-NRCC-PLB-01-E (Revised 07/16) CALIFORNIA ENERGY COMMISSION

CERTIFICATE OF COMPLIANCE	NRCC-PLB-01-E
Water Heating System General Information	(Page 1 of 2)
Project Name: Bishops	Date Prepared: 9/12/2017

A. GENERAL INFORMATION/SYSTEM INFORMATION		
01	Water Heater System Name:	A O Smith Water Products DEL 50
02	Water Heater System Configuration:	Non-Central
03	Water Heater System Type:	
04	Building Type:	
05	Total Number of Water Heaters in Systems:	1
06	Central DHW Distribution Type:	n/a
07	Dwelling Unit DHW Distribution Type:	All Pipes Ins

B. WATER HEATER INFORMATION Each water heater type requires a separate compliance document.		
01	Water Heater Type:	Small Storage Electric
02	Fuel Type:	Electric Res
03	Manufacture Name:	A O Smith Water Products DEL 50
04	Model Number:	
05	Number of Identical Water Heaters:	1
06	Installed Water Heater System Efficiency:	1.00
07	Required Minimum Efficiency:	1.00
08	Standby Loss Percent or Standby Loss Total:	0.750
09	Rated Input:	20.478
10	Pilot Energy:	
11	Water Heater Tank Storage Volume:	50
12	Exterior Insulation on Water Heater:	0
13	Volume of Supplemental Storage:	
14	Internal Insulation on Supplemental Storage:	
15	Exterior Insulation on Supplemental Storage:	

C. PLUMBING COMPLIANCE FORMS & WORKSHEETS

Check box if worksheet is included.

For detailed instructions on the use of this and all Energy Standards compliance documents, refer to the 2016 Nonresidential Manual

Note: The Enforcement Agency may require all compliance documents to be incorporated onto the building plans.

YES	NO	Doc/Worksheet #	Title
☒	☐	NRCC-PLB-01-E	Certificate of Compliance, Declaration. Required on plans for all submittals.
☒	☐	NRCI-PLB-01-E	Certificate of Installation. Required on plans for all submittals.
☐	☐	NRCI-PLB-02-E	Certificate of Installation, required on central systems in high-rise residential, hotel/motel application.
☐	☐	NRCI-PLB-03-E	Certificate of Installation, required on single dwelling unit systems in high-rise residential, hotel/motel application.
☐	☐	NRCI-PLB-21-H	Certificate of Installation, required on HERS verified central systems in high-rise residential, hotel/motel application.
☐	☐	NRCI-PLB-22-H	Certificate of Installation, required on HERS verified single dwelling unit systems in high-rise residential, hotel/motel application.
☐	☐	NRCI-STH-01-E	Certificate of Installation, required on any solar water heating

STATE OF CALIFORNIA

WATER HEATING SYSTEM GENERAL INFORMATION

CEC-NRCC-PLB-01-E (Revised 07/16) CALIFORNIA ENERGY COMMISSION

CERTIFICATE OF COMPLIANCE	NRCC-PLB-01-E
Water Heating System General Information	(Page 2 of 2)
Project Name: Bishops	Date Prepared: 9/12/2017

DOCUMENTATION AUTHOR'S DECLARATION STATEMENT

1. I certify that this Certificate of Compliance documentation is accurate and complete.

Documentation Author Name:	Peter A. Leptuch, P.E.	Documentation Author Signature:	
Company:	Peter A. Leptuch, P.E.	Signature Date:	9/12/2017
Address:	1236 Golden Eagle Court	CEA/ HERS Certification Identification (if applicable):	
City/State/Zip:	Aubrey, TX, 76227	Phone:	(940) 735-5127

RESPONSIBLE PERSON'S DECLARATION STATEMENT

I certify the following under penalty of perjury, under the laws of the State of California:

1. The information provided on this Certificate of Compliance is true and correct.
2. I am eligible under Division 3 of the Business and Professions Code to accept responsibility for the building design or system design identified on this Certificate of Compliance (responsible designer).
3. The energy features and performance specifications, materials, components, and manufactured devices for the building design or system design identified on this Certificate of Compliance conform to the requirements of Title 24, Part 1 and Part 6 of the California Code of Regulations.
4. The building design features or system design features identified on this Certificate of Compliance are consistent with the information provided on other applicable compliance documents, worksheets, calculations, plans and specifications submitted to the enforcement agency for approval with this building permit application.
5. I will ensure that a completed signed copy of this Certificate of Compliance shall be made available with the building permit(s) issued for the building, and made available to the enforcement agency for all applicable inspections. I understand that a completed signed copy of this Certificate of Compliance is required to be included with the documentation the builder provides to the building owner at occupancy.

Responsible Designer Name:	Peter A. Leptuch	Responsible Designer Signature:	
Company:	Peter A. Leptuch, P.E.	Date Signed:	9/12/2017
Address:	1236 Golden Eagle Court	License:	M35700
City/State/Zip:	Aubrey, TX 76227	Phone:	(940) 735-5127

GHA
Architecture / Development
14901 Quorum Drive
Suite 300
Dallas Texas 75254
Ph: (972) 239-8884
Fax: (972) 239-5054

REGISTERED PROFESSIONAL ENGINEER PETER A. LEPTUCH M35700 TEXAS
09/18/17

BISHOPS

BISHOPS – TENANT FINISHOUT
SOUTH MARKET APARTMENTS
1 SOUTH MARKET STREET
SAN JOSE, CA 95113

DO NOT SCALE DRAWINGS
CONTRACTOR TO VERIFY
ALL EXISTING CONDITIONS AND
DIMENSIONS–NOTIFY ARCHITECT
OF ANY DISCREPANCIES PRIOR
TO BEGINNING CONSTRUCTION

NO | REVISION

ISSUE

Peter A. Leptuch, P.E.
CA-M35700/CA-E18972
1236 Golden Eagle Ct
Aubrey, TX 76227
(940) 735-5127
Registered Professional Engineer
Mechanical
Texas

ISSUE FOR PERMIT 09/18/17

PROJECT NUMBER
C170357

SHEET NUMBER
M2.3
MECHANICAL
TITLE 24

DATE OF THIS PRINTING – 09/18/17

PLUMBING FIXTURE SCHEDULE

MARK	FIXTURE	CW	HW	W	V	ADA	DESCRIPTION
WC	WATER CLOSET	1"	---	4"	2"	YES	FIXTURES: SLOAN WETS 2020.1001-1.28 MANUAL SLOAN ROYAL 111-1.28 HET FLUSHOMETER AND ADA COMPLIANT HET WATER CLOSET (SUPPLY LINES 1") COLOR: TBD SEAT: CHAMPION #5325.010 (DISTRIBUTION LINES: 1-1/4")
LAV	LAVATORY	1/2"	1/2"	2"	1-1/2"	YES	FIXTURE: AMERICAN STANDARD "LUCERNE" WALL-HUNG LAVATORY, WITH VITREOUS CHINA. FAUCET: AMERICAN STANDARD "MONTERREY" MODEL #6114.114 SINGLE CONTROL CENTERSET FAUCET. CAST BRASS BODY, LESS POP-UP DRAIN, ROD AND HOLE.MIXING VALVES, 0.35 GPM, VANDAL-RESISTANT, PRESSURE COMPENSATING MULTI-LAMINAR SPRAY. MIXING VALVES SHALL BE POWERS #LM495; ASSE 1070.
SS	SERVICE SINK	1/2"	1/2"	3"	1-1/2"	YES	FIXTURES: FLOOR MOUNTED MOP SINK 24"X24", MODEL -FIAT MSB2424. PROVIDE LOW FLOW AERATOR FAUCET: MOEN #8232 W/ ADA LEVER HANDLES. SS DOME STRAINER AND LINT BASKET.
FD	FLOOR DRAIN	---	---	3"	1-1/2"	---	3" CAST IRON FLOOR DRAIN WITH POLISHED NICKEL BRONZE TOP. ZURN Z-415-J (SQUARE) J.R. SMITH NO 2005Y-A, JOSAM3000-S OR APPROVED EQUAL. ADJUSTABLE STRAINER WITH FLASHING CLAMP DEVICE, PROVIDE TRAP PRIMER CONNECTTION PER LL REQUIREMENTS.
LB	WASHING MACHINE BOX	VARIES	VARIES	2"	1-1/2"	---	FIXTURE: OATEY #38747 WITH INTEGRAL SHOCK ARRESTERS OR EQUAL
TP	TRAP PRIMER	---	---	---	---	---	FIXTURE: McGUIRE *8902. / SUPPLIES: McGUIRE *2165CC. / COLOR: WHITE, TRAP PRIMER LINES SHALL BE PIPED HARD DRAWN COPPER, NO EXCEPTIONS.
WHA	WATER HAMMER ARRESTOR.	1/2"	---	---	---	---	PROVIDE AND INSTALL AT ALL FAST CLOSING VALVES, INCLUDING FLUSH VALVES, AND AT ENDS OF FIXTURE RUNS.
SB	SHAMPOO BOWL	3/4"	3/4"	2"	1-1/2"	YES	COLLINS SQUARE PORCELAIN BOWL, CB80, WHITE, WITH JEFFCO 570 SINGLE HANDLE FAUCET, SPRAY HOSE, VACUUM BREAKER, DRAIN ASSEMBLY, AND MOUNTING BRACKET. 19"W x 20"D x 10"H. TRADITIONAL SIDEWASH BOWL. HAIR TRAP (MARBLE 1701) TO BE FURNISHED AND INSTALLED BY G.C. REQUIRED VENDOR AND CONTACT: COSMOPROF – GREG MCCLELLAN, SALON DESIGNS AND SALES, (425) 457-2644, GMcClellan@CosmoProfBeauty.com
HS	DROP-IN SINK	1/2"	1/2"	2"	1-1/2"	YES	PROVIDED BY OWNER, INSTALLED BY G.C. HAIR TRAP (MARBLE 1701) AND MIXING VALVE (POWERS #LM495-1; ASSE 1070) TO BE FURNISHED AND INSTALLED BY G.C.
RP	RECIRCULATION PUMP	---	1"	---	---	---	GRUNDFOS UP10-16 BU SERIES. 20A/1P POWER, PROVIDE WITH AQUASTAT AND TIMER. 36"-203" SERVICE. 2.2 GPM. 3.9 TOTAL HEAD FT. 115 VOLTS.
WH	WATER HEATER (ELECTRIC)	1"	1"	---	---	---	AO SMITH DEL-40, OR EQUAL. TWO 3.0 KW STAGES. 21.75" DIAMETER, 24" DRAIN PAN. 40 STORAGE GALLONS. GLASS LINING. 480 VOLTS 3 PHASE. 6 KW.
DF	DRINKING FOUNTAIN	1/2"	---	2"	1-1/2"	YES	ELKAY – EZTL8C BARRIER FREE HI-LOW DRINKING FOUNTAIN. REFER TO ELKAY TEMPLATE FOR WATER ROUGH-IN HEIGHT, CANE APRON, APPROX. 19"AFF. PROVIDE APRON LKAPREZL, INSTALL PER ADA.
FS	FLOOR SINK	---	---	4"	2"	YES	JOSAM 49320-PVC 3" 12X12X6 PVC SQUARE, WITH DOME STRAINER AND HALF-GRATE.

NOTES:
1. ALL FIXTURES MAY BE SUBSTITUTED FOR APPROVED EQUALS.
2. NOT ALL FIXTURES USED ON ALL JOBS.
3. ALL FIXTURES -- PROVIDE TRAP PRIMERS WHERE REQUIRED BY LOCAL CODES AND/OR AHJ.

THIS IS A CALIFORNIA PROJECT THAT REQUIRES LOW-FLOW FIXTURES AND NO-LEAD FIXTURES, PER STATE CODE. VERIFY WITH MANUFACTURER AT TIME OF ORDER THAT FIXTURES LISTED HERE WILL BE SUITABLE FOR USE IN THE STATE, AND IF NOT, PROVIDE MOST SIMILAR AVAILABLE COMPLIANT SUBSTITUTE.

PLUMBING GENERAL NOTES

1. CONTRACTORS AND SUB CONTRACTORS SHALL CAREFULLY REVIEW THE CONSTRUCTION DOCUMENTS. INFORMATION REGARDING THE COMPLETE WORK IS DISPERSED THROUGHOUT THE DOCUMENT SET AND CANNOT BE ACCURATELY DETERMINED WITHOUT REFERENCING THE COMPLETE DOCUMENT SET.
2. COORDINATE WITH THE WORK OF OTHER SECTIONS, EQUIPMENT FURNISHED BY OTHERS, REQUIREMENTS OF THE OWNER AND CONSTRAINTS OF THE EXISTING CONDITIONS OF THE PROJECT SITE.
3. ALL ROOFING WORK (CUTS, REPAIRS, SPUD WORK, ETC.) SHALL BE PERFORMED BY THE LANDLORD'S APPROVED ROOFING CONTRACTOR.
4. DRAWINGS FOR THE PLUMBING WORK ARE DIAGRAMMATIC SHOWING THE GENERAL LOCATION, EQUIPMENT TYPE AND LAYOUT, THE DRAWINGS SHALL NOT BE SCALED FOR EXACT MEASUREMENT. REFER TO MANUFACTURERS STANDARD INSTALLATION DRAWINGS FOR EQUIPMENT CONNECTIONS AND INSTALLATION REQUIREMENTS. PROVIDE PLUMBING, CONNECTIONS, OFFSETS, ACCESSORIES AND MATERIALS NECESSARY FOR A COMPLETE SYSTEM.
5. ALL WORK SHALL COMPLY WITH STATE AND LOCAL CODE REQUIREMENTS AS APPROVED AND AMENDED BY THE AUTHORITY HAVING JURISDICTION INCLUDING APPLICABLE LOCAL, STATE AND NATIONAL CODES THE TIME OF THE PROPOSAL. PURCHASE ALL PERMITS ASSOCIATED WITH THE WORK AND OBTAIN ALL INSPECTIONS REQUIRED BY CODE.
6. WASTE PIPING SHALL BE INSET FROM PERIMETER WALLS EXCEPT AT FIXTURE CONNECTIONS TO AVOID STRUCTURAL ELEMENTS AND ALLOW FOR REPAIRS WITHOUT TEARING OUT A DEMISING WALL, ETC.
7. TRENCHING OF EXISTING REINFORCED CONCRETE FLOOR SLAB IS TO BE KEPT TO A MINIMUM QUANTITY AND WIDTH. WHERE CODES PERMIT, GROUP UNDER FLOOR UTILITIES IN SINGLE TRENCHES. THE MINIMUM TRENCH WIDTH IS TO BE TWELVE INCHES (12"). DOWEL NEW SLAB INFILLS INTO EXISTING SLAB EDGES. PROVIDE SLAB INFILL STEEL REINFORCING TO MATCH EXISTING. COAT SAWCUT SLAB EDGES WITH HIGH-STRENGTH BONDING AGENT. LAY IN NEW UNDERSLAB VAPOR BARRIER, LAP AND SEAL TO EXISTING VAPOR BARRIER.
8. TENANT IS NOT TO SUSPEND ANY ITEMS FROM THE BOTTOM OF THE ROOF DECK. TENANT IS NOT TO SUSPEND ANY ITEMS FROM THE BOTTOM ROOF JOIST OR JOIST GIRDER CHORDS, WITHOUT WRITTEN APPROVAL OF THE BUILDING SHELL STRUCTURAL ENGINEER OF RECORD. TENANT IS TO SUBMIT PROPOSED DETAILS, FOR ITEMS SUSPENDED FROM THE ROOF STRUCTURE, FOR REVIEW BY SHELL STRUCTURAL ENGINEER.
9. IN GENERAL, NO DUCTWORK, CONDUITS, PIPES, BANNERS, SIGNAGE, OR CURTAIN/SUSPENDED FURR-DOWNS OR WALL ARE TO BE SUSPENDED FROM THE BOTTOM OF THE ROOF STRUCTURE, WITHOUT APPROVAL. NO TENANT FINISHOUT WORK IS TO BE SUSPENDED FROM ANY WORK BY ANOTHER TRADE, FROM JOIST BRIDGING OR FROM X-BRACING OR FROM THE BOTTOM OF THE ROOF DECK. SUSPENDED TEE GRID CEILINGS AND LIGHT FIXTURES MAY BE SUSPENDED FROM THE BOTTOM ROOF JOIST AND BOTTOM JOIST GIRDER CHORDS IN MAXIMUM WEIGHTS OF SEVENTY-FIVE (75) POUNDS AT BOTTOM CHORD JOIST PANEL POINTS, WITHOUT ADDED STEEL ANGLE REINFORCING UP TO TOP JOIST CHORDS. SUSPENDED CEILINGS AND LIGHT FIXTURES ARE NOT TO BE SUSPENDED FROM THE BOTTOM OF THE ROOF DECK.
10. SET MAXIMUM TEMPERATURE AT HAND SINKS AT 110°F.
11. PROVIDE HEAT TRACE ON ALL PIPES INSTALLED IN AREAS SUBJECT TO FREEZING. INSTALL PIPING ON CONDITIONED SIDE OF BUILDING INSULATION.
12. PROVIDE CUTOFF ABOVE CEILING, IN ADDITION TO AT FIXTURE WHERE REQUIRED BY A.H.J.
13. LABEL ALL ABOVE CEILING VALVES AND OR EQUIPMENT ON T-BAR GRID, ON ACCESS PANELS SERVING SUCH EQUIPMENT. USE ¼" TEXT ON WHITE PEEL AND STICK LABELS.

PLUMBING RISER NOTES (SUPPLY & WASTE)

1. PLUMBING CONTRCTOR SHALL REFER TO ARCHITECTURAL DRAWINGS, ADA SHEET G-002 FOR PLACEMENT OF SHOWER HOT AND COLD WATER SUPPLY, PRIOR TO INSTALLATION. WATER SUPPLY LOCATIONS ON THIS SHEET ARE DIAGRAMATIC.
2. THE CONTRACTOR SHALL CONFIRM WASTE LINES FOUND IN FIELD AND SHALL VERIFY THAT CYCLE BAR SANITARY WASTE LINES ARE CONNECTED TO BUILDING SANITARY WASTE LINE, AND NOT INTO A BUILDING COMMON GREASE WASTE LINE.

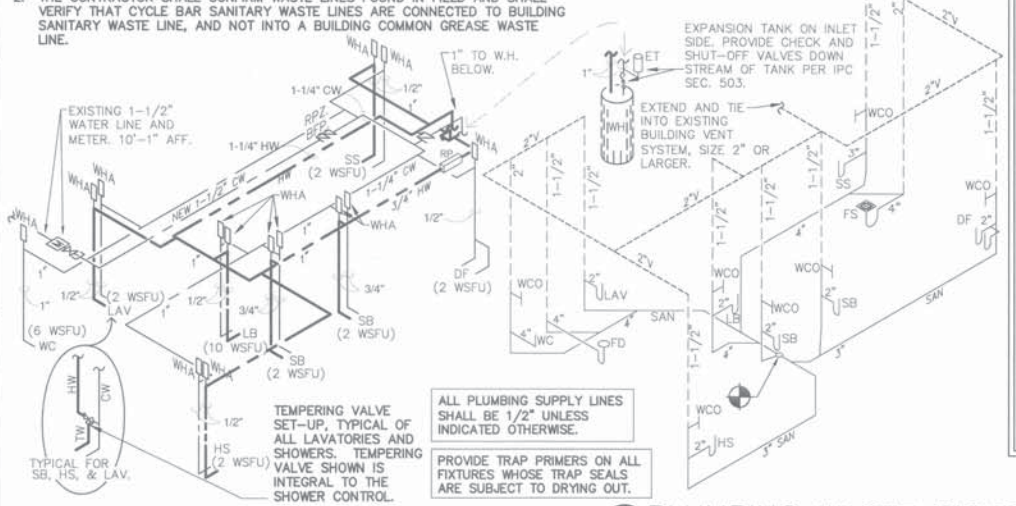

TEMPERING VALVE SET-UP, TYPICAL OF ALL LAVATORIES AND SHOWERS. TEMPERING VALVE SHOWN IS INTEGRAL TO THE SHOWER CONTROL.

ALL PLUMBING SUPPLY LINES SHALL BE 1/2" UNLESS INDICATED OTHERWISE.

PROVIDE TRAP PRIMERS ON ALL FIXTURES WHOSE TRAP SEALS ARE SUBJECT TO DRYING OUT.

03 PLUMBING SUPPLY RISER
SCALE: NOT TO SCALE

04 PLUMBING WASTE RISER
SCALE: NOT TO SCALE

PLUMBING LEGEND

HW	HOT WATER SUPPLY LINE
CW	COLD WATER SUPPLY LINE
X" SAN	SANITARY WASTE LINE
	PIPE DROP
	RISER VENT (DASHED)
T.P.	TRAP PRIMER
	CONTINUATION
	END CAP
	ISOLATION / SHUT-OFF VALVE
	EXTENT OF SAWCUTTING/ TRENCHING
M	WATER SUBMETER, BETWEEN VALVE AND 1ST FIXTURE.
R	REMOTE READOUT FOR SUBMETER, +54" VERIFY LOCATION WITH OWNER'S REP.
	CONNECTION OF NEW TO EXISTING.
RPZ	REDUCED PRESSURE ZONE BACK FLOW ASSEMBLY.
	CHECK VALVE
R.P.	RECIRCULATION PUMP.
WCO	WALL CLEAN OUT
FCO	FLOOR CLEAN OUT
VTR	VENT THRU ROOF
(EX.)	EXISTING PIPING
X"V	VENT

THERMOSTATIC MIXING VALVE NOTE:

ALL TEMPERING VALVES TO BE ASSE1070 OR CSAB125.3

PLUMBING PLAN KEY NOTES

1. PROVIDE AND INSTALL TANK TYPE WATER HEATER, PER SCHEDULE, AND DETAIL 03 (SHEET M2.0).
2. POINT OF CONNECTION (DIAGRAMMATIC) TO WATER MAIN IN CEILING SPACE, VERIFY POINT OF CONNECTION. FROM POINT OF CONNECTION, ROUTE 1" C.W. PIPING IN JOIST SPACE.
3. PROVIDE TRAP PRIMERS/TRAP GUARDS ON ALL HUB/FLOOR DRAINS, WHERE REQUIRED. VERIFY EXACT LOCATION WITH OWNER'S REPRESENTATIVE.
4. DO NOT ROUTE LINES ABOVE ELECTRICAL GEAR, OR PROVIDE PROTECTION IF LINES ARE EXISTING, VIA WATERPROOF SLEEVE. WHERE IMPRACTICAL, ELECTRICAL CONTRACTOR SHALL PROVIDE NEMA 3R (OUTDOOR RATED) GEAR/EQUIPMENT.
5. PROVIDE WASHER BOX AT 36" AFF FOR HW, CW & SAN CONNECTIONS. WALL SHALL ALLOW FOR 4" DRYER VENT TO BE CONCEALED WITHIN WALL.
6. PROVIDE W.H.A. ON ALL FAST CLOSING VALVES, AND WHERE ELSE INDICATED AND WHERE NECESSARY.
7. B.F.P. SHALL BE ACCESSIBLE FOR INSPECTION AND TESTING. TYPICALLY ABOVE OR NEXT TO WATER HEATER. ROUTE DISCHARGE TO NEAREST APPROVED RECEPTOR, PROVIDE AND INSTALL HUB DRAIN WITH TRAP PRIMER AS NEEDED.
8. FURROUT WALLS AS NECESSARY FOR POWER, PLUMBING, AND DRYER VENT.
9. PROVIDE NEPTUNE E-CODER METER WITH ELECTRONIC OUTREADER (REMOTE READOUT REGISTER). VERIFY WITH OWNER'S REP FINAL PLACEMENT OF REMOTE READ OUT UNLESS WATER USAGE IS INCLUDED IN C.A.M CHARGES.
10. CONNECTION TO EXISTING SANITARY SEWER MAIN LOCATION SHOWN IS DIAGRAMMATIC, AT APPROXIMATELY THE LOCATION INDICATED. COORDINATE EXACT LOCATION IN FIELD. MINIMIZE NUMBER OF TIE IN POINTS. VERIFY LOCATION, INVERT, AND DIRECTION OF FLOW PRIOR TO CONNECTING.
11. SLOPE UNDERSLAB 4" SANITARY LINE AT 1/8" PER FOOT. VERIFY EXACT POINT OF CONNECTION IN FIELD.
12. COORDINATE ROUTING OF UNDERSLAB WASTE LINES IN FIELD WITH STRUCTURAL ELEMENTS.

ALL PLUMBING AND ELECTRICAL SHALL BE CONCEALED WITHIN WALLS OR ABOVE CEILING. SOME LINES MAY BE OFFSET TO SHOW DIAGRAMMATIC CONNECTIONS.

IT IS THE RESPONSIBILITY OF THE CONTRACTOR TO NOTIFY THE ARCHITECT, LANDLORD OR TENANT OF ANY DISCREPANCIES ENCOUNTERED ON THE PLANS OR IN EXISTING CONDITIONS PRIOR TO COMMENCEMENT OF WORK. BIDDERS ARE TO VISIT THE SITE AND FAMILIARIZE THEMSELVES WITH EXISTING CONDITIONS AND SATISFY THEMSELVES AS TO THE NATURE AND SCOPE OF WORK. THE BASE BID SHALL REFLECT MODIFICATIONS TO SYSTEMS AND DEVICES AS REQUIRED BY STATE AND LOCAL CODES WHETHER INDICATED OR NOT ON CONTRACT DOCUMENTS. THE SUBMISSIONS OF A BID WILL BE EVIDENCE THAT SUCH AN EXAMINATION AND COMPLIANCE WITH GOVERNING CODES / REQUIREMENTS HAS BEEN MADE. LATER CLAIMS FOR LABOR, EQUIPMENT, OR MATERIALS REQUIRED OR FOR DIFFICULTIES ENCOUNTERED WHICH COULD HAVE BEEN FORESEEN, HAD AN EXAMINATION AND CODE REVIEW BEEN MADE, WILL NOT BE ALLOWED.

BISHOPS – PROTO NOTE:

BASE BID TO ASSUME THAT THE JURISDICTION REQUIRES CONTAINMENT BACK FLOW PREVENTION. P.C. SHALL CONFIRM WITH PLUMBING INSPECTOR IF BUILDING HAS MAIN RPZBFP AND DOES NOT REQUIRE ADDITIONAL BFP IN SPACE, THE PLUMBER MAY OMIT BFP. IF JURISDICTION REQUIRES ISOLATION BFP, THE PLUMBING CONTRACTOR SHALL OMIT THE RPZ BFP NEAR THE MOP SINK AND INSTEAD SHALL PROVIDE A POINT OF USE BFP AT THE WATER BAR, AT THE DRINKING FOUNTAIN. AS APPLICABLE/AS REQUIRED AND ELSEWHERE AS DETERMINED BY THE PLUMBING INSPECTOR.

BISHOPS TYPICAL:

MINIMUM WATER SIZE WITH FLUSH VALVE TOILETS SHALL BE 1-1/4". MINIMUM WATER LINE SIZE WITH FLUSH TANK TOILETS MAY BE 3/4" OR 1" DEPENDING ON SITE CONDITIONS.

= CONNECT NEW TO EXISTING

2" AND 3" SANITARY LINES SHALL HAVE 1-1/2" VENT RISERS, 4" SANITARY LINES SHALL HAVE 2" VENT RISERS. OVERHEAD HORIZONTAL VENTS SHALL BE 2". CONFORM TO THESE SIZES UNLESS OTHERWISE ALLOWED/ REQUIRED BY A.H.J..

VERIFY ALL CONDITIONS IN FIELD.

CALIFORNIA NOTE:

ALL PLUMBING FIXTURES AND FITTINGS SHALL MEET THE STANDARDS REFERENCED IN TABLE 1401.1 OF THE 2016 CPC AND CGBSC CHAPTER 6. CGBSC SECTION 5.303.6

CALIFORNIA NOTE:

ALL FIXTURES SHALL BE THE MINIMUM WATER EFFICIENCY RATES OF THE FOLLOWING FIXTURES PER CGBSC TABLE 5.303.2.2
A.SHOWERHEADS – 2.0 GPM @ 80 PSI.
B.LAVATORIES – 0.5 GPM @ 60 PSI.
C.WATER CLOSETS – 1.28 GALLONS/FLUSH.
D.URINALS (FLOOR MOUNTED) – 0.5 GALLONS/FLUSH.
E.URINALS (WALL MOUNTED) – 0.125 GALLONS/FLUSH.

CONFIRM AT TIME OF ORDER AND IF THESE EFFICIENCIES ARE NOT MET, ORDER THE NEAREST EQUAL FIXTURE AVAILABLE FROM THE PLUMBING SUPPLY HOUSE THAT MEETS THE ABOVE FLOW REQUIREMENTS.

FIELD VERIFY LOCATION OF PLUMBING VTR, INSTALL AFTER ALL HVAC UNITS ARE IN PLACE TO ENSURE NO VENT IS WITHIN 10'-0" OF ANY FRESH AIR INTAKE AND THAT NO EXTRA / UNNECESSARY ROOF PENETRATIONS ARE MADE.

PLUMBING CONTRACTOR SHALL MAKE ADJUSTMENTS WHERE NECESSARY TO KEEP PLUMBING VENTS A MINIMUM OF 10'-0" AWAY FROM ALL FRESH AIR INTAKES. WAIT FOR FINAL HVAC UNIT LOCATIONS PRIOR TO CUTTING ROOF PENETRATIONS.

SAN JOSE, CA NOTE (HOT WATER RECIRC. SYSTEM):

PER CALIFORNIA ENERGY EFFICIENCY STANDARD, SECTION 113(c)5. THE PLUMBING CONTRACTOR SHALL PROVIDE AND INSTALL:

A) AN AIR RELEASE VALVE REQUIRED ON THE INLET SIDE OF THE RECIRCULATING PUMP, WITHIN 4' OF THE PUMP.

B) A CHECK VALVE REQUIRED BETWEEN THE RECIRCULATING PUMP AND THE WATER HEATING EQUIPMENT TO PREVENT THE HOT WATER FROM FLOWING BACKWARDS THROUGH THE RECIRCULATION LOOP.

C) A CHECK VALVE REQUIRED ON THE COLD WATER SUPPLY LINE BETWEEN THE HOT WATER SYSTEM AND THE NEXT CLOSEST TEE ON THE COLD WATER SUPPLY LINE. (SEE CPC 608.3 FOR EXPANSION TANK REQUIREMENTS)

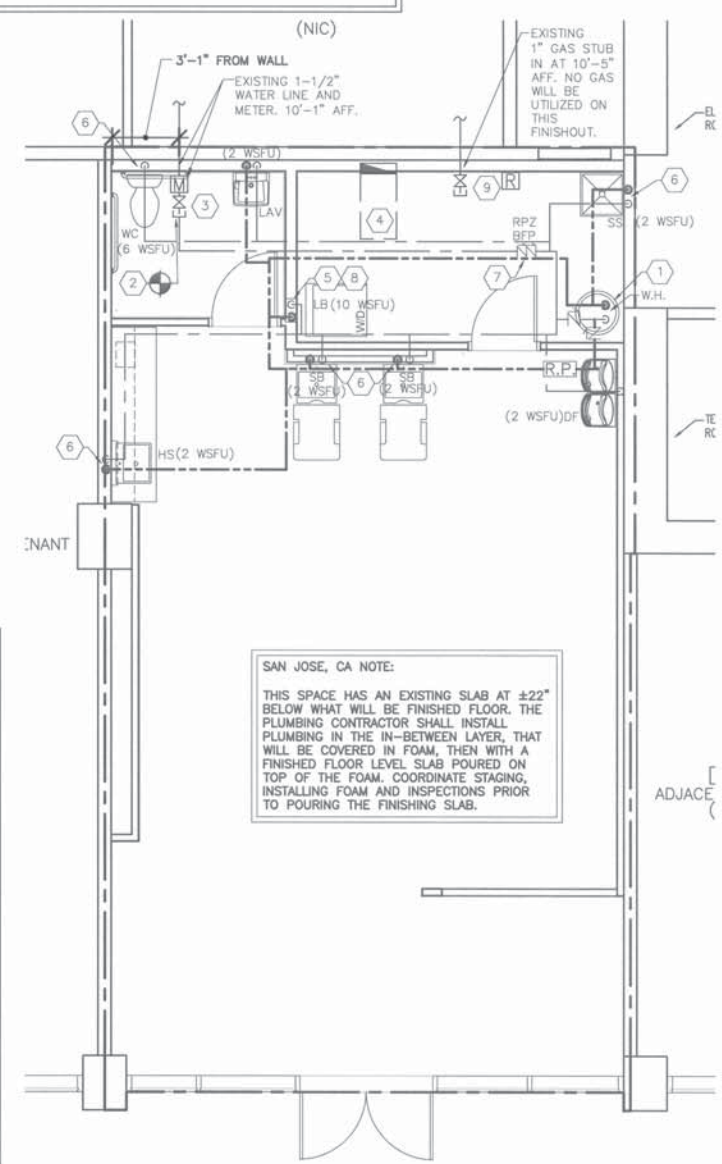

SAN JOSE, CA NOTE:

THIS SPACE HAS AN EXISTING SLAB AT ±22" BELOW WHAT WILL BE FINISHED FLOOR. THE PLUMBING CONTRACTOR SHALL INSTALL PLUMBING IN THE IN-BETWEEN LAYER, THAT WILL BE COVERED IN FOAM, THEN WITH A FINISHED FLOOR LEVEL SLAB POURED ON TOP OF THE FOAM. COORDINATE STAGING, INSTALLING FOAM AND INSPECTIONS PRIOR TO POURING THE FINISHING SLAB.

01 PLUMBING SUPPLY PLAN
SCALE: 1/4"=1'-0"

NORTH

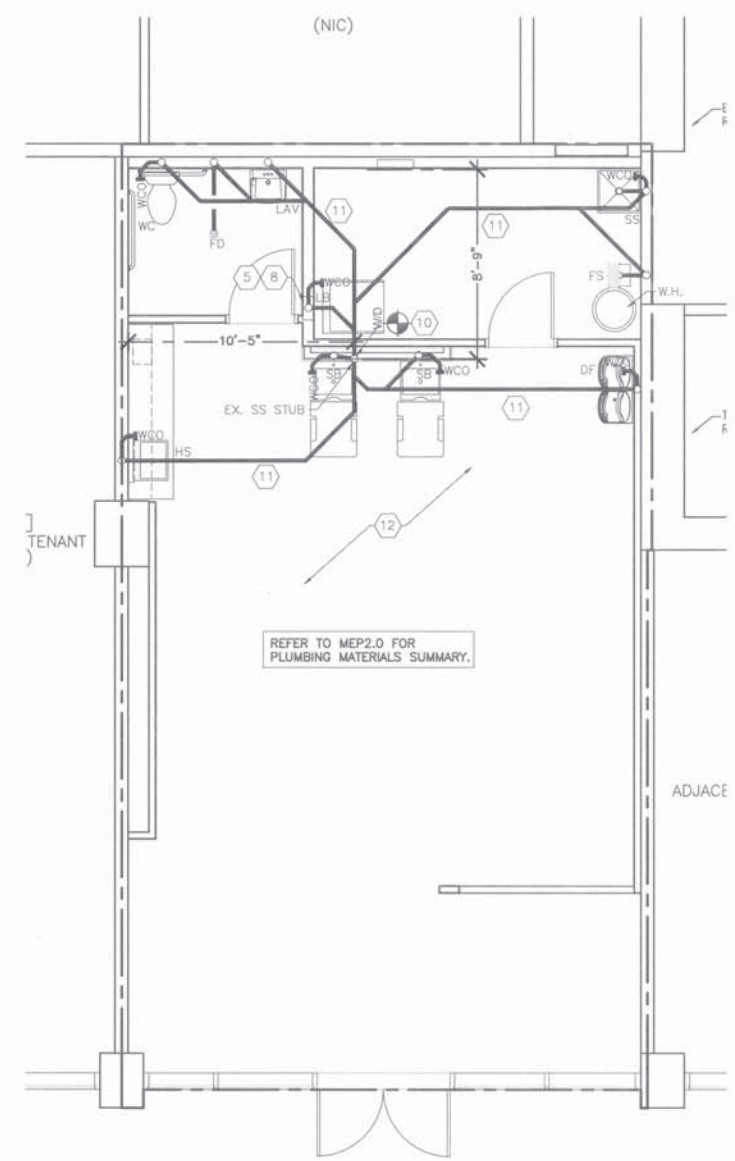

REFER TO MEP2.0 FOR PLUMBING MATERIALS SUMMARY.

02 PLUMBING WASTE PLAN
SCALE: 1/4"=1'-0"

NORTH

GHA
Architecture / Development
14901 Quorum Drive
Suite 300
Dallas Texas 75254
Ph: (972) 239-8884
Fax: (972) 239-0054

BISHOPS – TENANT FINISHOUT
SOUTH MARKET APARTMENTS
1 SOUTH MARKET STREET
SAN JOSE, CA 95113

DO NOT SCALE DRAWINGS
CONTRACTOR TO VERIFY ALL EXISTING CONDITIONS AND DIMENSIONS-NOTIFY ARCHITECT OF ANY DISCREPANCIES PRIOR TO BEGINNING CONSTRUCTION

NO	REVISION

ISSUE

ISSUE FOR PERMIT 09/18/17

PROJECT NUMBER
C170357

SHEET NUMBER
P1.0

PLUMBING PLANS
DATE OF THIS PRINTING – 09/18/17

ELECTRICAL SYMBOL LEGEND

SYMBOL	DESCRIPTION	HEIGHT (U.N.O.)
$	SINGLE POLE SINGLE THROW TOGGLE SWITCH (NOTE L-1)	44"
$3/$4	THREE-WAY TOGGLE SWITCH/FOUR-WAY TOGGLE SWITCH (NOTE L-1)	44"
$M	MOTOR RATED SWITCH	
$D	DIMMER SWITCH (NOTE L-1)	44"
$TT	2-HOUR IN-LINE TWIST TIMER BYPASS (OVERRIDE) TO CONTROL GENERAL LIGHTING.	44"
	DUPLEX / QUAD RECEPTACLE OUTLET (NOTE L-1)	24" TO CENTERLINE (U.N.O)
	OTHER RECEPTACLE, AS NOTED.	
	DUPLEX RECEPTACLE OUTLET, CEILING MOUNTED/FLOOR MOUNTED	
(#)	THE NUMBER IN PARENTHESIS IS THE CONVENIENT OUTLET COUNT FOR THE CIRCUIT.	
	JUNCTION BOX, CEILING / FLOOR MOUNTED	SEE PLAN
	TELEPHONE OUTLET, WALL MOUNTED / FLOOR MOUNTED	SEE PLAN
	DATA OUTLET, WALL MOUNTED/FLOOR MOUNTED	SEE PLAN
	CURRENT TRANSFORMER	
	POWER METER AND SOCKET	
	RACEWAY/CABLE CONCEALED IN WALL AND/OR ABOVE CEILING	
	GROUNDING CONNECTION (SYSTEM AND/OR EQUIPMENT)	
X-1,3,5	ARROWHEAD INDICATES HOMERUN. X-1,3,5 INDICATES HOMERUN TO PANEL X CIRCUIT NUMBERS 1,3, AND 5.	
	MOTOR	
	PANELBOARD - WALL MOUNTED (RECESSED/SURFACE MOUNTED)	
60/3/3R	NONFUSIBLE DISCONNECT SWITCH, RATING/POLES/NEMA ENCLOSURE	
60/40/3P/3R	FUSIBLE DISCONNECT SWITCH, RATING/FUSE RATING/POLES/NEMA ENCLOSURE	
	DUCT SMOKE DETECTOR	
	THERMAL DETECTOR, WALL MOUNTED	SEE PLAN
	THERMOSTAT, WALL MOUNTED	
	CONNECT NEW TO EXISTING	
N.I.C.	NOT IN CONTRACT	
NL	INDICATES 24-HOUR NIGHT LIGHT ON THE UNSWITCHED LEG OF LIGHT CIRCUIT.	

L-1 MOUNTING HEIGHTS NOTED ARE TO THE CENTER OF DEVICE ABOVE FINISHED FLOOR, UNLESS NOTED OTHERWISE (U.N.O.).
L-2 FIRE ALARM VISUAL DEVICES SHALL BE WALL-MOUNTED 80" AFF OR 6" BELOW CEILING, WHICHEVER IS LOWER. AUDIBLE ONLY DEVICES SHALL BE WALL-MOUNTED AT NOT LESS THAN 90" AFF AND NOT LESS THAN 6" BELOW CEILING.

* NOT ALL SYMBOLS USED ON ALL JOBS *

RCP LEGEND

SYMBOL	DESCRIPTION
A	CEILING FLUSH MOUNT LIGHT: MANF: WAC LIGHTING MODEL #FM-4009-30-CH, 10W LED A120V
B	WALL MOUNT LIGHT: MANF: CUSTOM LIGHT FIXTURE, 22W LED 120V. DAMP LABEL, MOUNT B/O 3'-8" AFF
B2	WALL MOUNT LIGHT: MANF: GEORGE KOVACS MODEL #P5044-840-L, 10W A120V MOUNT ABOVE MIRROR AT 84" AFF
D	RECESSED CAN LIGHT (DAMP LABEL COMPATIBLE) MANF: JUNO, 5" IC 900 LUMEN LED DOWNLIGHT MODEL #SP2940363-27K-N-1
COM	LED EMERGENCY EGRESS LIGHTING/SIGNAGE COMBO WITH 90 MINUTE BATTERY BACKUP MANF: BARRON EXITRONIX, - VLED-EL90 SERIES, MODEL #GVLED-U-BL-EL90
E1	LED EMERGENCY EGRESS LIGHTING WITH 90 MINUTE BATTERY BACKUP - MANF: BARRON EXITRONIX, - LED-EL90 SERIES, MODEL #LED-90-BL
E2	LED EMERGENCY EXIT SIGN WITH 90 MINUTE BATTERY BACKUP - ARROW DENOTES DIRECTIONAL SIGNAGE MANF: HUBBELL LIGHTING, - COMPASS SERIES, MODEL #CER
E3	LED EMERGENCY EXTERIOR EGRESS LIGHTING - CONNECTED TO EXIT SIGN BATTERY BACKUP- MANF: HUBBELL LIGHTING, - COMPASS SERIES, MODEL #CORD
G	~~2x4 RECESSED LED LUMINAIRE FIXTURE MANF: INDY LIGHTING MODEL #S2X4BL-39-30-U-WH-3~~
L1	DECORATIVE PENDANT LIGHT MANF: CUSTOM, AIRCRAFT CABLE SUSPENDED, 22W LED, 120/277V, DAMP LABEL, MOUNT SO B/O FIXTURE IS AT 9'-0" A.F.F.
	TRACK LIGHT SYSTEM: MANF: JUNO, TRAC-MASTER TRACK, & TRAC-LITES FIXTURES MODEL #T 4 OR 8 FT TRACKS BL, SP36475-35-K-F-BL FIXTURE HEADS, PAR20 LED 8W-10W A120V, BOT OF TRACK AT 108" AFF, 3 HEADS PER STATION AND AS SHOWN

CALIFORNIA NOTE:
AT TIME OF ORDER, CONTRACTOR SHALL ENSURE LED FIXTURES ARE PROVIDED WITH IN-LINE CURRENT LIMITER IN TRACK. PROVIDE ALL DIMMABLE-TYPE LAMPS.

SAN JOSE, CA NOTE:
ALL ELECTRICAL OUTLET SWITCHES IN DEMISING WALL SHALL BE INSTALLED WITH FIRE RATED PUTTY, TO MAINTAIN FIRE RATING OF WALL, PER ARCHITECTURAL SHEETS. PUTTY SHALL BE HILTI OR EQUAL.

SAN JOSE, CA NOTE:
THE LEASE'S LANDLORD WORK LETTER (EXHIBIT C-1) INDICATES THE SPACE IS TO BE DELIVERED IN AS-IS CONDITION. ALL WORK NECESSARY FOR A COMPLETE BUILD OUT SHALL BE BY TENANTS' G.C. ALL REFERENCES OTHERWISE SHALL BE UNDERSTOOD TO MEAN ALL WORK IS BY TENANT'S GENERAL CONTRACTOR. G.C. SHALL VISIT SITE PRIOR TO BID TO ENSURE THAT THEIR BID REFLECTS ALL REQUIRED WORK.

KEY NOTES BY SYMBOL '⬡'

1. PANEL 'LA'. PANEL SHALL BE SURFACE-MOUNTED, AND FACE OPEN INTO ROOM. FURROUT WALLS AS NECESSARY.
2. TWO EXISTING 3" CONDUIT TO EXISTING ELECTRICAL SERVICE/METERING EQUIPMENT, T.G.C. SHALL PROVIDE AND PULL CONDUCTORS.
3. TWO (2) PHONE LINES AND ONE DATA LINE TO THE PHONE BOARDS. VERIFY EXACT PLACEMENT WITH OWNER'S REP, AND FIELD VERIFY POINT OF CONNECTION TO LANDLORD'S DMARK.
4. ELECTRIC DRYER. PROVIDE (2)#10,#10G., 3/4"C, 30/2 RECEPTACLE
5. CONTRACTOR SHALL COORDINATE ALL REQUIREMENTS AND QUANTITY FOR ELECTRICAL AND BLOCKING/MOUNTING WITH SIGN PROVIDER AND PROVIDE AS NECESSARY PRIOR TO ROUGH-IN. CONTRACTOR SHALL FIELD VERIFY EXISTING SIGN CIRCUIT COMPLIES WITH ALL LOCAL AND NATIONAL CODES AND IS PROVIDED WITH ALL REQUIRED DISCONNECTING MEANS PER NEC. PROVIDE INTERIOR ACCESS PANELS FOR SIGN CIRCUIT AS NECESSARY.
6. 42"x16"x3/4" 'AC' GRADE PLYWOOD TELEPHONE BOARD. PROVIDE GROUND PER NEC. RUN 3/4" CONDUIT TO LANDLORD'S TELEPHONE CONNECTION POINT.
7. PROVIDE A REMOTE ANNUNCIATOR FOR DUCT SMOKE DETECTORS AT CEILING OF RECEPTION DESK. REMOTE ANNUNCIATOR SHALL BE EQUAL TO SYSTEM SENSOR RA100Z/RA100ZA WITH AUDIBLE AND VISUAL ANNUNCIATOR. LABEL EACH ANNUNCIATOR ACCORDING TO UNIT BEING MONITORED.
8. CIRCUIT RESTROOM/UTILITY ROOM EXHAUST FAN(S) TO LOCAL LIGHT SWITCH. PROVIDE 10-MINUTE DELAY TIMEOUT.
9. IF EXISTING WATER LINES ARE LOCATED ABOVE ELECTRICAL PANEL LOCATIONS SHOWN HERE, FABRICATE A LEAK SHIELD AROUND PIPES TO DIVERT FLOW AWAY FROM DRIPPING ONTO PANELS. USE A 4" PVC SLEEVE THAT STICKS OUT 6" BEYOND EDGES OF ELECTRICAL GEAR, OR SIMILAR. SLEEVE SHALL BE SEALED LONGITUDINALLY TO PREVENT PRESSURIZED SPRAY FROM REACHING EQUIPMENT BELOW AND OPEN ONLY ON THE TWO ENDS.
10. PROVIDE POWER CONNECTION TO SUB-METER/ REMOTE REGISTER WHERE REQUIRED BY LEASE/LANDLORD. OMIT IF WATER IS INCLUDED IN C.A.M. OR SIMILAR. FIELD COORDINATE LOCATION, SEE SHEET P1.0 FOR ADDITIONAL INFO.
11. FURROUT WALLS FOR POWER AND PLUMBING (SUPPLY, WASTE, AND VENT) LINES AS NECESSARY.
12. E.C. TO PROVIDE WHIP AT +24" AFF FOR QUAD OUTLET BOX SET INSIDE RECEPTION DESK. ROUTE CONDUIT UP TO NEAREST WALL, UP AND OVER TO PANEL. G.C. TO VERIFY OUTLET LOCATIONS AFTER MILLWORK INSTALL.
13. PLACE RECIRCULATION PUMP OUTLET/J-BOX ABOVE WATER HEATER IN UTILITY ROOM WHERE SPACE ALLOWS.
14. PROVIDE OCCUPANCY SENSOR PER SCHEDULE.
15. EXIT LIGHT SHALL BE CIRCUITED TO UNSWITCHED LEG OF LOCAL LIGHT CIRCUIT. PROVIDE CHEVRONS AS NEEDED.
16. EMERGENCY EGRESS LIGHT SHALL BE CIRCUITED TO UNSWITCHED LEG OF LOCAL LIGHT CIRCUIT.
17. T-24 COMPLIANT LIGHTING CONTROL PANEL (LEVITON EZ-MAX R08BD-000 8-SPACE) TO BE ORDERED AS PART OF LIGHTING PACKAGE. WHERE EXTERIOR SIGNAGE IS ON LANDLORD'S LIGHTING CONTROL PANEL, INSTALL A 4-POLE LIGHTING CONTROL PANEL (RE4BD-104).
18. TV QUAD RECEPTACLE AND DATA. VERIFY LOCATION AND MOUNTING HEIGHT WITH OWNER'S REPRESENTATIVE.
19. PROVIDE (2) EMPTY CONDUIT WITH PULL STRING AT CASH WRAP FOR SPEAKER WIRE AND CAT 5 TO NEAREST WALL AT HEIGHT DETERMINED IN FIELD. FURROUT WALL AS NECESSARY, PAINT CONDUIT AS REQUIRED.
20. THIS OUTLET SHALL BE CONTROLLED THROUGH L.C.P.

GC TO RUN CAT 5 AND SPEAKER WIRE AND TERMINATE AT ENDS.

GENERAL NOTES

A. LIGHTING SHALL BE CIRCUITED EXACTLY AS SHOWN ON PLANS.
B. SEE ARCHITECTURAL REFLECTED CEILING PLAN FOR EXACT LOCATION AND QUANTITY OF LIGHTING FIXTURES.
C. EMERGENCY AND EXIT LIGHTS SHALL BE INSTALLED AND CIRCUITED PER THE LATEST NATIONAL ELECTRICAL CODE AND ALL LOCAL CODES. ALL EMERGENCY AND EXIT FIXTURES SHALL BE DUAL VOLTAGE (120/277 VOLT INPUT) WITH 90 MINUTE BATTERY BACKUP.
D. ELECTRICAL SUB-CONTRACTOR IS RESPONSIBLE FOR ALL REFLECTED CEILING PLAN NOTES ON ARCHITECTURAL DRAWINGS.
E. ALL FLUORESCENT LIGHTING SHALL BE PROVIDED WITH INTEGRAL DISCONNECTING MEANS PER NEC.
F. EXTERIOR LIGHTS ARE EXISTING BY LANDLORD, TO REMAIN.
G. THE DIRECTION OF THE BUILDING OFFICIAL/QUANTITY, LOCATION AND TYPE OF EXIT/EGRESS LIGHTS REQUIRED SHALL TAKE PRECEDENCE OVER WHAT IS SHOWN IN THIS DOCUMENT SET.
H. ALL LIGHTS PROVIDED AND INSTALLED BY G.C., WITH THE EXCEPTION OF B, L1, AND T FIXTURES, WHICH ARE TO BE OWNER PROVIDED AND G.C. INSTALLED.
I. EMERGENCY/EGRESS AND EXIT LIGHTS SHALL BE ON A NON-SWITCHED LEG OF CIRCUIT.
J. PROVIDE CURRENT LIMITERS (IN-LINE) FOR TRACK LIGHTING AS NEEDED WHERE REQUIRED BY INSPECTOR TO ACHIEVE ENERGY CODE COMPLIANCE.
K. TRACK AND SCONCES DO NOT PROVIDE GENERAL LIGHTING AND THEREFOR ARE NOT REQUIRED TO BE CONTROLLED BY DAYLIGHT SENSORS. (T-24/CALIFORNIA)
L. DAYLIGHTING IS NOT REQUIRED WHEN A ZONE HAS LESS THAN 120 WATTS OF GENERAL LIGHTING, OR LESS THAN 24 SQ. FT. OF GLAZING. (T-24/CALIFORNIA)

CONTRACTOR NOTES:

IT IS THE RESPONSIBILITY OF THE CONTRACTOR TO NOTIFY THE ARCHITECT, LANDLORD OR TENANT OF ANY DISCREPANCIES ENCOUNTERED ON THE PLANS OR IN EXISTING CONDITIONS PRIOR TO COMMENCEMENT OF WORK.

BIDDERS ARE TO VISIT THE SITE AND FAMILIARIZE THEMSELVES WITH EXISTING CONDITIONS AND SATISFY THEMSELVES AS TO THE NATURE AND SCOPE OF WORK. THE BASE BID SHALL REFLECT MODIFICATIONS TO SYSTEMS AND DEVICES AS REQUIRED BY STATE AND LOCAL CODES WHETHER INDICATED OR NOT ON CONTRACT DOCUMENTS. THE SUBMISSIONS OF A BID WILL BE EVIDENCE THAT SUCH AN EXAMINATION AND COMPLIANCE WITH GOVERNING CODES / REQUIREMENTS HAS BEEN MADE. LATER CLAIMS FOR LABOR, EQUIPMENT, OR MATERIALS REQUIRED OR FOR DIFFICULTIES ENCOUNTERED WHICH COULD HAVE BEEN FORSEEN, HAD AN EXAMINATION AND CODE REVIEW BEEN MADE, WILL NOT BE ALLOWED.

GENERAL NOTES

1. GENERAL RECEPTACLES INSTALLED AT +15" TO BOTTOM OF BOX A.F.F.
2. VERIFY GFI REQUIREMENTS PRIOR TO BID. ALL RECEPTACLES WITHIN 6'-0" OF A SINK OR WASH BASIN SHALL BE GFI RATED.
3. ALL COVER PLATES, OUTLETS AND SWITCHES IN THE PUBLIC AREA SHALL BE FACTORY BLACK. ALL OTHERS TO BE FACTORY BRIGHT WHITE.
4. SMOKE DETECTORS, FIRE ALARM SYSTEM, STROBES, HORNS, SPRINKLERS, ETC. SHALL BE DESIGNED AND INSTALLED WHERE REQUIRED BY A LICENSED FIRE SPRINKLER/ FIRE PROTECTION CONTRACTOR (DESIGN-BUILD) UNDER A SEPARATE PERMIT.
5. HVAC CONVENIENCE OUTLET(S) AND DISCONNECT(S) SHALL BE PROVIDED AND INSTALLED BY ELECTRICAL CONTRACTOR, SIZE TO MATCH BREAKERS ON PANEL AND/OR NAMEPLATE.
6. DISCONNECT SHALL BE RATED FOR VOLTAGE OF ORIGINATING PANEL.

T-24 CONTROLLABLE OUTLET (LEVITON 5362-S2T) REQUIREMENT:

IN ALL BUILDINGS, BOTH CONTROLLED AND UNCONTROLLED 120V RECEPTACLES SHALL BE PROVIDED IN EACH PRIVATE OFFICE, OPEN OFFICE AREA, RECEPTION LOBBY, CONFERENCE ROOM, KITCHENETTE IN OFFICE SPACES, AND COPY ROOM. ADDITIONALLY, HOTEL/MOTEL GUEST ROOMS SHALL COMPLY WITH ITEM 5. CONTROLLED RECEPTACLES SHALL MEET THE FOLLOWINGS REQUIREMENTS, AS APPLICABLE:

1. ELECTRIC CIRCUITS SERVING CONTROLLED RECEPTACLES SHALL BE EQUIPPED WITH AUTOMATIC SHUT-OFF CONTROLS FOLLOWING THE REQUIREMENTS PRESCRIBED IN SECTION 130.1(c)(1-5).
2. AT LEAST ONE CONTROLLED RECEPTACLE SHALL BE INSTALLED WITHIN 6 FEET FROM EACH UNCONTROLLED RECEPTACLE OR A SPLITWIRED DUPLEX RECEPTACLE WITH ONE CONTROLLED AND ONE UNCONTROLLED RECEPTACLE SHALL BE INSTALLED.
3. CONTROLLED RECEPTACLES SHALL HAVE A PERMANENT MARKING TO DIFFERENTIATE THEM FROM UNCONTROLLED RECEPTACLES.
4. FOR OPEN OFFICE AREAS, CONTROLLED CIRCUITS SHALL BE PROVIDED AND MARKED TO SUPPORT INSTALLATION AND CONFIGURATION OF OFFICE FURNITURE WITH RECEPTACLES THAT COMPLY WITH SECTION 130.5(d).
5. FOR HOTEL AND MOTEL GUEST ROOMS AT LEAST ONE-HALF OF THE 120V RECEPTACLES IN EACH GUEST ROOM SHALL BE CONTROLLED RECEPTACLES THAT COMPLY WITH SECTION 130.5(d)1, 2, AND 3. ELECTRIC CIRCUITS SERVING CONTROLLED RECEPTACLES SHALL HAVE CAPTIVE CARD KEY CONTROLS, OCCUPANCY SENSING CONTROLS, OR AUTOMATIC CONTROLS SUCH THAT, NO LONGER THAN 30 MINUTES AFTER THE GUEST ROOM HAS BEEN VACATED, POWER IS SWITCHED OFF.
6. PLUG-IN STRIPS AND OTHER PLUG-IN DEVICES THAT INCORPORATE AN OCCUPANCY SENSOR SHALL NOT BE USED TO COMPLY WITH THIS REQUIREMENT.

BISHOPS PROTOTYPICAL NOTE: JURISDICTIONS VARY AS TO WHO CAN MAKE FINAL CONNECTION OF SIGN TO BUILDING POWER. SOME JURISDICTIONS REQUIRE SPECIAL SIGN PERMITS. THE ELECTRICAL CONTRACTOR SHALL PROVIDE AN ACCESSIBLE J-BOX AT BUILDING PERIMETER FOR EACH SIGN LOCATION ON ALL JOBS WITH MEANS OF DISCONNECT AND CONDUCTOR BACK TO THE PANEL, PER NEC. THE SIGN CONTRACTOR SHALL PROVIDE ALL SIGNS WITH A SINGLE WHIP POKING THROUGH THE BACK OF THE SIGN OR SIGN RACEWAY FOR EACH SIGN LOCATION. FINAL CONNECTION (INCLUDING ANY CONDUIT ABOVE METAL AWNING/ STRUCTURE OR OTHER SPECIAL 'GAP' SITE CONDITIONS) SHALL BE BY ELECTRICAL CONTRACTOR UNLESS THE A.H.J. REQUIRES THIS CONNECTION TO BE BY THE SIGN CONTRACTOR.

SENSOR/ACCESSORY SCHEDULE

DESCRIPTION	SYMBOL	MODEL NUMBER	UNOBSTRUCTED RATED COVERAGE	MOUNTING	WATTAGE/ VOLTAGE	TIME DELAY	NOTES
PASSIVE INFRARED SWITCH	$IR	WATTSTOPPER DW-100 (OR EQUAL)	300 SF	WALL	800W/120V 1200W/277V	5/15/30 MIN	1
PROVAULT CEILING SENSOR	CS	LEVITON 06C04-IDW	---	CEILING	-	-	1
LOW VOLTAGE DIMMER	$D	LEVITON DSE 06-10Z	---	WALL	LOW	-	PENDANT LIGHTS
LINE VOLTAGE DIMMER	$D	LEVITON DSM 10-1LZ	---	WALL	LINE	-	TRACK LIGHTS AND SCONCES, RESTROOM

NOTES:
1. SENSOR REQUIRES POWER PACK (INSTALL IN ACCESSIBLE LOCATION)
2. SWIVEL MOUNTING BRACKET INCLUDED.

SAN JOSE, CA NOTE:
THIS FIRST GENERATION TENANT SPACE IS ON THE GROUND FLOOR OF A MULTI-STORY MIXED USE BUILDING.

SAN JOSE, CA NOTE:
THIS SPACE IS AN EXISTING AS-IS TENANT LEASE SPACE.

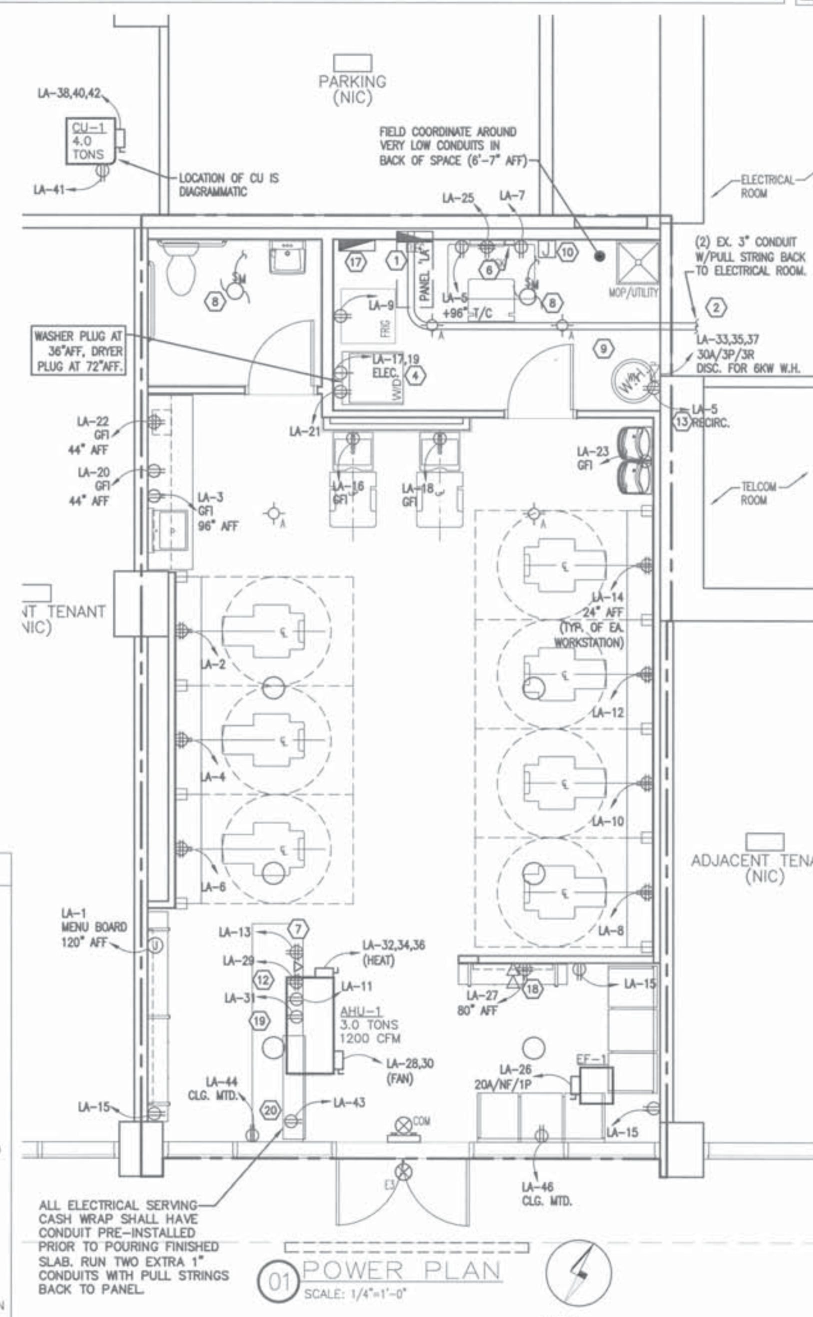

01 POWER PLAN
SCALE: 1/4"=1'-0"

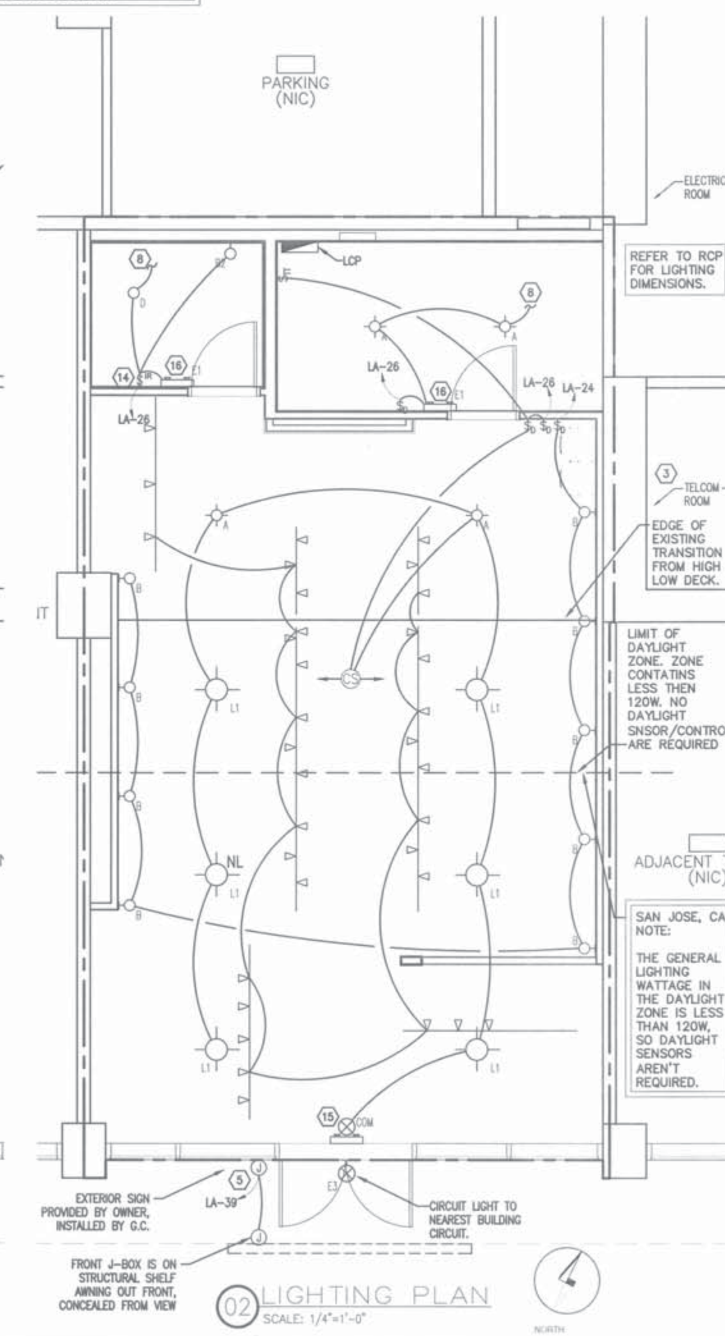

02 LIGHTING PLAN
SCALE: 1/4"=1'-0"

GH A
Architecture / Development
14901 Quorum Drive
Suite 300
Dallas, Texas 75254
Ph: (972) 239-8884
Fax: (972) 239-5054

REGISTERED PROFESSIONAL ENGINEER, ELECTRICAL, PETER A. LEPTUCH, E 19072
09/18/17

BISHOPS

BISHOPS – TENANT FINISHOUT
SOUTH MARKET APARTMENTS
1 SOUTH MARKET STREET
SAN JOSE, CA 95113

DO NOT SCALE DRAWINGS CONTRACTOR TO VERIFY ALL EXISTING CONDITIONS AND DIMENSIONS-NOTIFY ARCHITECT OF ANY DISCREPANCIES PRIOR TO BEGINNING CONSTRUCTION

NO.	REVISION

ISSUE

Peter A. Leptuch, P.E.
CA-M35700/CA-E19072
1236 Golden Eagle Ct.
Aubrey, TX 76227
(940) 735-5127

ISSUE FOR PERMIT 09/18/17

PROJECT NUMBER
C170357

SHEET NUMBER
E1.0
ELECTRICAL PLANS

DATE OF THIS PRINTING - 09/18/17

PANELBOARD SCHEDULE - 'LA' (NEW)

MAIN: 125A MCB | VOLTAGE: 208/120 | PHASE: 3 | WIRE: 4 | MOUNTING: RECESSED | AIC: 42KAIC

CKT #	TRIP POLE	DESCRIPTION	LTG	REC	MTR	A/C	HTG	KIT	MISC	PHASE A	PHASE B	PHASE C	LTG	REC	MTR	A/C	HTG	KIT	MISC	DESCRIPTION	TRIP POLE	CKT #
			LOAD (KVA)										LOAD (KVA)									
1	20/1	MENU BOARD											0.4							WORKSTATION	20/1	2
3	20/1	BRANDED LIGHT BOX REC.		0.2									0.4							WORKSTATION	20/1	4
5	20/1	TIME CLOCK/RECIRC. PUMP							0.2				0.4							WORKSTATION	20/1	6
7	20/1	DESK RECEPTACLE		0.2									0.4							WORKSTATION	20/1	8
9	20/1	REFRIGERATOR							0.5				0.4							WORKSTATION	20/1	10
11	20/1	T-24 CONTROLLABLE RECEP											0.4							WORKSTATION	20/1	12
13	20/1	POS				0.4							0.4							WORKSTATION	20/1	14
15	20/1	CONV. REC.				0.5							0.5							SHAMPOO STATION (GFI)	20/1	16
17	30/2	DRYER (ELEC)							2.5				0.5							SHAMPOO STATION (GFI)	20/1	18
19	-	-							2.5				0.2							COUNTERTOP REC.	20/1	20
21	20/1	WASHING MACHINE				1.0							0.4							TOWEL WARMER	20/1	22
23	20/1	DRINKING FOUNTAIN				0.2							1.3							LIGHTING	20/1	24
25	20/1	PHONE BOARD				0.4							1.3							LIGHTING, EF-1	20/1	26
27	20/1	TV RECEPTACLE		0.4												0.6				AHU-1 (FAN)	15/2	28
29	20/1	CASH WRAP (QUAD)		0.4												0.6				-	-	30
31	20/1	CASH WRAP (DUPLEX)		0.2												1.7				AHU-1 (HEAT)	20/3	32
33	25/3	WATER HEATER							1.5							1.7				-	-	34
35	-	-							3.0							1.7				-	-	36
37	-	-							1.5							1.5				CU-1	20/3	38
39	20/1	SIGN	1.2													1.5				-	-	40
41	20/1	HVAC OUTLETS(WP/WR)		0.2												1.5						42
43	20/1	CONTROLLABLE OUTLET		0.2															1.6	S/W RECEPTACLE	20/1	44
45	20/1	SPARE																	1.6	S/W RECEPTACLE	20/1	46
47	20/1	SPARE																		SPARE	20/1	48
49	20/1	SPARE																		SPARE	20/1	50
51	20/1	SPARE																		SPARE	20/1	52
53	20/1	SPARE																		SPARE	20/1	54
LIGHTING (KVA):		3.8	1.2	1.6	0.0	2.5	0.0	0.0	11.7				2.6	4.1	0.0	10.6	0.0	0.0	3.2	CONNECTED LOAD (KVA):		37.4
RECEPTACLES (KVA):		5.7																		DEMAND LOAD (KVA):		37.4
MOTORS (KVA):		0.0								PHASE A			13	104.6								
A/C (KVA):		13.1								PHASE B			12	101.4						CONNECTED LOAD (AMPS):		103.8
HEATING (KVA):		0.0								PHASE C			13	105.6						DEMAND LOAD (AMPS):		103.8
KITCHEN (KVA):		0.0											KVA	AMPS								
MISCELLANEOUS (KVA):		14.9																		AMPACITY REQUIRED:		106.4

NOTES: BREAKERS PROTECTING MULTI-WIRE BRANCH CIRCUITS SHALL BE EQUIPPED WITH A PAD-LOCK DEVICE SO THAT CIRCUITS CAN BE DISCONNECTED SIMULTANEOUSLY.
- PROVIDE 'HACR' TYPE CIRCUIT BREAKER

*BALANCE ALL PANELS TO WITHIN 10%.

01 PANEL SCHEDULES
SCALE: NOT TO SCALE

AMPACITY REQD CALCS

LIGHTING		3.80	KVA X	125	%	=	4.8 KVA
RECEPTACLE	TOTAL	5.68	KVA				
	1ST	10.00	KVA X	100	%	=	5.7 KVA
	REMAIN	0.00	KVA X	50	%	=	0.0 KVA
MOTORS	TOTAL	0.00	KVA X	100	%		
	LARGEST		KVA X	125	%	=	0.0 KVA
	REMAIN	0.00	KVA X	100	%	=	0.0 KVA
A/C		13.05	KVA X	100	%	=	13.1 KVA
HEATING		0.00	KVA X	100	%	=	0.0 KVA
LOCKED-OUT LOAD			KVA X	100	%	=	0.0 KVA
KITCHEN		0.00	KVA X	65	%	=	0.0 KVA
MISCELLANEOUS		14.86	KVA X	100	%	=	14.9 KVA
TOTAL						=	38.3 KVA

BISHOPS – SAN JOSE, CA NOTE:

THE BASE BUILDING HAS 480V SERVICE, BUT THE RETAIL METERING CENTER IS ALREADY STEPPED DOWN TO 208V. THUS THIS SHEET CALLS FOR EXISTING 120/208V 3ϕ4 W ELECTRICAL SERVICE.

SAN JOSE, CA NOTE:

THE SERVICE IS <50KVA. DESEGREGATION OF LOADS IS NOT REQUIRED.

SAN JOSE, CA NOTE:

THE SPACE IS LESS THAN 10,000 SQ. FT. A DEMAND RESPONSIVE SYSTEM IS NOT REQUIRED.

BISHOPS PROTOTYPICAL NOTE: SEE SHEET MEP1.0 FOR POWER FOR ROOF-MOUNTED EQUIPMENT.

VERIFY SIGN LOCATION AND QUANTITY WITH SEPARATELY PERMITTED SIGN PACKAGE.

SIGNAGE SHALL COMPLY WITH PERMITTED SIGN PACKAGE. ADJUST WHAT IS SHOWN HERE (QUANTITY AND LOCATION) TO MATCH SIGNAGE SET, TYPICAL UNDER A SEPARATE PERMIT.

REVIEW AND APPROVAL BY THE A.H.J. SHALL NOT RELIEVE THE APPLICANT OF THE RESPONSIBILITY OF COMPLIANCE WITH ALL APPLICABLE CODES, INCLUDING ANY REQUESTS MADE BY INSPECTOR ON SITE FOR DEFICIENCIES THAT WERE NOT IDENTIFIED DURING PLAN CHECK REVIEW BY THE AHJ.

LABEL THE TENANT'S DISCONNECT IN 1" LETTERING: "BISHOPS BARBER SHOP – 1 SOUTH MARKET ST.".

VERIFY WITH UTILITY CO. EXISTING LOAD SERVING NEIGHBORING TENANTS (IF PRESENT) PRIOR TO ENERGIZING SERVICE.

HOMERUNS AND BRANCH WIRING FOR 20 AMP CIRCUITS SHALL BE AS FOLLOWS:

LENGTH	CIRCUIT WIRE SIZE	HOMERUN WIRE SIZE
1FT TO 50FT	NO.12 AWG	NO.12 AWG
51FT TO 75FT	NO.12 AWG	NO.10 AWG
76FT TO 120FT	NO.10 AWG	NO.8 AWG
121FT TO 190FT	NO.10 AWG	NO.6 AWG
191FT TO 300FT	NO.10 AWG	NO.4 AWG

EXISTING ELECTRICAL SERVICE: 120/208V, 3 PH, 4 WIRE.

ONE-LINE RISER NOTES:

1. PROVIDE LOCK-ON BREAKERS FOR ALL NL/EM AND SECURITY/PHONE CIRCUITS, DUCT DETECTORS, AND TIME CLOCK.
2. ALL WIRING, INSULATION, ETC. IN AN ENCLOSED PLENUM SPACE SHALL BE PLENUM RATED.
3. USE THWN WIRE INSULATION, 75°C.
4. PROVIDE POWER FOR ANCILLARY ITEMS AS NEEDED FOR A COMPLETE INSTALL, SUCH AS DUCT DETECTORS, FLUSH VALVES AND FAUCET SENSORS AS NEEDED.
5. WHERE CONTRACTORS ARE ADDING SUB-PANELS TO A PROJECT, THE SUB-PANELS SHALL BE SCCR RATED AT 10 KAIC AND SAME MANUFACTURER AS THE EXISTING PANEL(S) AND SHALL BE FEED FROM A SERIES RATED BREAKER. OTHERWISE SUB-PANELS SHALL BE FULLY RATED WITH SAME SCCR AS ORIGINATING PANEL.
6. ELECTRICAL CONTRACTOR SHALL VERIFY AVAILABLE FAULT WITH UTILITY CO. PRIOR TO ORDERING GEAR AND ENERGIZING SERVICE AND SHALL LABEL GEAR WITH SCCR RATING AND AVAILABLE FAULT AT EACH PIECE OF EQUIPMENT AND DATE CALCULATIONS WERE MADE.
7. PROVIDE ARCFLASH HAZARD WARNING LABELS ON ALL GEAR AS REQUIRED BY N.E.C.
8. DISCONNECTS SHALL BE RATED AT VOLTAGE OF EQUIPMENT SERVED. CONFIRM VOLTAGE AVAILABLE ON SITE PRIOR TO ORDERING EQUIPMENT.
9. ON 480V JOBS, AS NEEDED, PROVIDE SECONDARY DISCONNECT (FUSED) WITHIN 10' OF THE STEP DOWN TRANSFORMER WHERE SECONDARY CONDUCTOR DISTANCE IS >25' OR AS REQUIRED ELSEWHERE BY THE TAP RULE.
10. THE CONTRACTOR MAY INSTALL FLEXIBLE METAL CONDUIT TO TERMINATE CIRCUITS, IN SEGMENTS NOT TO EXCEED 5'-0".
11. ALL ELECTRICAL OUTLET SWITCHES IN FIRE-RATED WALLS SHALL BE INSTALLED WITH FIRE-RATED BLOCKING PUTTY PADS (TYP.).

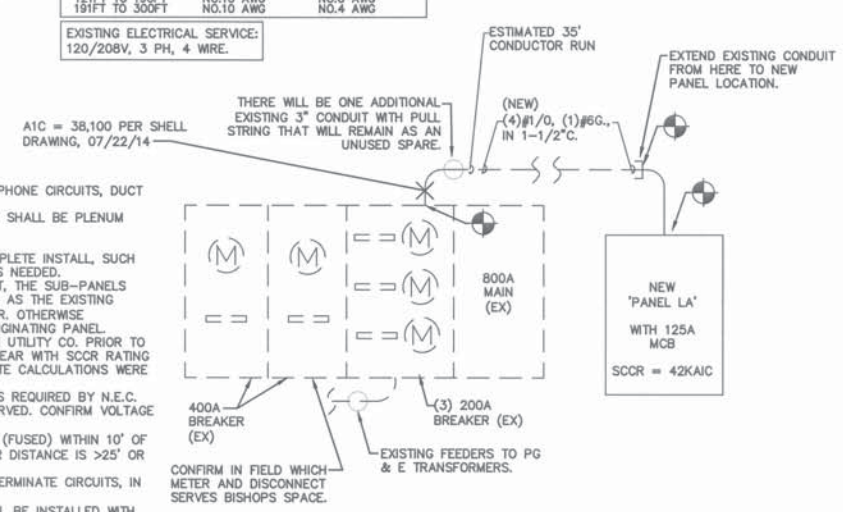

02 ONE LINE RISER
SCALE: NOT TO SCALE

LIGHTING CONTROL PANEL ZONES

1. TRACK
2. 110V SOURCES
3. LOW VOLTAGE PENDANT/ MS
4. CONTROLLABLE OUTLET
5. SIGN
6. S/W RECEPTACLE #1
7. S/W RECEPTACLE #2
8. SPARE

*WHEN BUILDING SIGN POWER IS ROUTED THROUGH LANDLORD'S CONTROL SYSTEM, AND SHOW WINDOW RECEPTACLES ARE NOT REQUIRED, AND THE CLIENT DOES NOT WANT ANY SPARE CIRCUITS ON THE CONTROL PANEL, THEN A 4-POLE LCP MAY BE USED (RE4BD-104).

PROVIDE PHOTOCELL INPUT TO SIGNAL FOR SIGN CIRCUIT AND S/W CIRCUIT TO ENERGIZE AND DEENERGIZE, WHERE REQUIRED BY A.H.J. PHOTOCELL IS NOT REQUIRED WHEN TIME CLOCK IS ASTRONOMICAL TYPE.

LIGHTING CONTROL PANEL SPECIFICATION:

MANUF.	MODEL	NOTES
LEVITON	EZ-MAX R08BD-000	8-SPACE, CONTROLS LOW AND LINE VOLTAGE CIRCUITS. LCP CONTAINS AN INTEGRAL TIME CLOCK

SAN JOSE, CA NOTE:

PROVIDE A LABEL AT THE EX. 200A BREAKER IN THE LANDLORD'S ELECTRICAL ROOM STATING THAT THE SERVICE IS FUSED AT 125A IN THE TENANT'S SPACE.

TITLE 24 NOTE:
INDOOR LIGHTING CONTROLS SHALL BE INSTALLED IN COMPLIANCE WITH TITLE 24, PART 6, SECTION 130.1.

A. ALL LUMINARIES SHALL BE FUNCTIONALLY CONTROLLED WITH MANUALLY SWITCHED ON AND OFF LIGHTING CONTROLS. CONTROLS SHALL BE READILY ACCESSIBLE, AND OPERATED WITH A MANUAL SWITCH THAT IS LOCATED IN THE SAME ROOM OR AREA WITH THE LIGHTING THAT IS CONTROLLED BY THAT LIGHTING CONTROL. DIMMING SWITCHES SHALL ALLOW A MANUAL ON-OFF FUNCTIONALITY AND AND IS CAPABLE OF MANUALLY CONTROLLING LIGHTING THROUGH ALL LIGHTING CONTROL STEPS THAT ARE REQUIRED IN SECTION 130.1(B).

B. MULTI-LEVEL LIGHTING CONTROLS. THE GENERAL LIGHTING OF ANY ENCLOSED AREA 100 SQ. FT. OR LARGER, WITH A CONNECTED LIGHTING LOAD THAT EXCEEDS 0.5 WATTS PER SQUARE FOOT SHALL MEET THE FOLLOWING REQUIREMENTS:

1. LIGHTING SHALL HAVE THE REQUIRED NUMBER OF CONTROL STEPS AND MEET THE UNIFORMITY REQUIREMENTS IN ACCORDANCE WITH TABLE 1301-A AND

2. MULTI-LEVEL LIGHTING CONTROLS SHALL NOT OVERRIDE THE FUNCTIONALITY OF OTHER LIGHTING CONTROLS REQUIRED FOR COMPLIANCE WITH SECTIONS 130.1(A), AND (C) THROUGH (E) AND

3. EACH LUMINAIRE SHALL BE CONTROLLED BY AT LEAST ONE OF THE FOLLOWING METHODS.

A. MANUAL DIMMING MEETING THE APPLICABLE REQUIREMENTS OF SECTION 130.1(A)

B. LUMEN MAINTENANCE AS DEFINED IN SECTION 100.1

C. TUNING AS DEFINED IN SECTION 100.1

D. AUTOMATIC DAYLIGHTING CONTROLS IN ACCORDANCE WITH SECTION 130.1(D)

E. DEMAND RESPONSIVE LIGHTING CONTROLS IN ACCORDANCE WITH SECTION 130.1(E)

C. IN ADDITIONAL TO LIGHTING CONTROLS INSTALLED TO COMPLY WITH SECTIONS 130.1(A) AND (B), ALL INSTALLED INDOOR LIGHTING SHALL BE EQUIPPED WITH CONTROLS THAT MEET THE FOLLOWING REQUIREMENTS:

A. SHALL BE CONTROLLED WITH AN OCCUPANT SENSING CONTROL, AUTOMATIC TIME-SWITCH CONTROL, SIGNAL FROM ANOTHER BUILDING SYSTEM, OR OTHER CONTROL CAPABLE OF AUTOMATICALLY SHUTTING OFF ALL OF THE LIGHTING WHEN TEH SPACE IS TYPICALLY UNOCCUPIED; AND
B. SEPARATE-CONTROLS FOR THE LIGHTING ON EACH FLOOR;, AND
C. SEPARATE CONTROLS FOR A SPACE ENCLOSED BY A CEILING HEIGHT PARTITION NOT EXCEEDING 5000 SQ. FT. (MALLS 20,000 SQ. FT.), [EXCEPTIONS FOR 24/365 FACILITIES, EQUIPMENT ROOMS, ETC.]; AND
D. SEPARATE CONTROLS FOR GENERAL, DISPLAY, ORNAMENTAL, AND DISPLAY CASE LIGHTING.

D. DAYLIGHT ZONES ARE REQUIRED. (SEE T-24 FOR ADDITIONAL INFORMATION)

E. DEMAND RESPONSIVE CONTROLS.

LIGHTING POWER IN BUILDINGS LARGER THAN 10,000 SQ. FT. SHALL BE CAPABLE OF BEING AUTOMATICALLY REDUCED IN RESPONSE TO A DEMAND RESPONSE SIGNAL; SO THAT THE BUILDING'S TOTAL LIGHTING POWER CAN BE LOWERED BY A MINIMUM OF 15 PERCENT BELOW THE TOTAL INSTALLED LIGHTING POWER. LIGHTING SHALL BE REDUCED IN A MANNER CONSISTENT WITH UNIFORM LEVEL OF ILLUMINATION REQUIREMENTS IN TABLE 130.1-A.

THE ABOVE REQUIRES AN AUTOMATED LIGHTING CONTROL SYSTEM IN WHICH ALL REQUIRED CIRCUITS ARE ROUTED THROUGH THE CONTROLLER.

AND... ALL LIGHT FIXTURES SHALL BE COMPATIBLE WITH SAID CONTROLLER.

A LIGHTING CONTROL SYSTEM SHALL BE AS SPECIFIED IN THE LIGHTING CONTROL PANEL SCHEDULE. IT IS RECOMMENDED THAT LIGHT FIXTURES AND LIGHTING CONTROL PANEL BE FROM A SINGLE VENDOR THAT VERIFIES COMPATIBILITY OF ALL COMPONENTS AND OFFERS COMMISSIONING OF THE BUILT SYSTEM.

GHA
Architecture / Development
14901 Quorum Drive
Suite 300
Dallas, Texas 75254
Ph: (972) 239-8884
Fax: (972) 239-5054

REGISTERED PROFESSIONAL ENGINEER PETER A. LEGTUCH E 19072 ELECTRICAL CALIFORNIA
09/18/17

BISHOPS
BISHOPS – TENANT FINISHOUT
SOUTH MARKET APARTMENTS
1 SOUTH MARKET STREET
SAN JOSE, CA 95113

DO NOT SCALE DRAWINGS
CONTRACTOR TO VERIFY ALL EXISTING CONDITIONS AND DIMENSIONS-NOTIFY ARCHITECT OF ANY DISCREPANCIES PRIOR TO BEGINNING CONSTRUCTION

NO	REVISION

ISSUE

Peter A. Legtuch, P.E.
CA-#35700/CA-E19072
236 Golden Eagle Ct
Aubrey, TX 76227
(940) 735-5127

ISSUE FOR PERMIT 09/18/17

PROJECT NUMBER
C170357

SHEET NUMBER
E2.0
ELECTRICAL PANELS AND RISER

DATE OF THIS PRINTING – 09/18/17

STATE OF CALIFORNIA
INDOOR LIGHTING
CEC-NRCC-LTI-01-E (Revised 04/16)

CALIFORNIA ENERGY COMMISSION

CERTIFICATE OF COMPLIANCE	NRCC-LTI-01-E
Indoor Lighting	(Page 1 of 6)
Project Name: Bishops	Date Prepared: 9/12/2017

A. General Information

Climate Zone: 4	Conditioned Floor Area: 1,003				
	Unconditioned Floor Area: 0				
Building Type:	☑ Nonresidential	☐ High-Rise Residential	☐ Hotel/Motel		
☐ Schools	☐ Relocatable Public Schools	☑ Conditioned Spaces	☐ Unconditioned Spaces		
Phase of Construction:	☐ New Construction	☐ Addition	☑ Alteration		
Method of Compliance:	☐ Complete Building	☑ Area Category	☐ Tailored		
Project Address: 1 South Market Street					

B. Lighting Compliance Documents (select yes for each document included)

For detailed instructions on the use of this and all Energy Efficiency Standards compliance documents, refer to the Nonresidential Manual published by the California Energy Commission.

YES	NO	COMP. DOC.	TITLE
☑	☐	NRCC-LTI-01-E	Certificate of Compliance. All Pages required on plans for all submittals.
☑	☐	NRCC-LTI-02-E	Lighting Controls, Certificate of Compliance, and PAF Calculation. All Pages required on plans for all submittals.
☑	☐	NRCC-LTI-03-E	Indoor Lighting Power Allowance
☐	☑	NRCC-LTI-04-E	Tailored Method Worksheets
☑	☐	NRCC-LTI-05-E	Line Voltage Track Lighting Worksheets
☐	☐	NRCC-LTI-06-E	Indoor Lighting Existing Conditions

CA Building Energy Efficiency Standards - 2016 Nonresidential Compliance — April 2016

STATE OF CALIFORNIA
INDOOR LIGHTING
CEC-NRCC-LTI-01-E (Revised 04/16)

CALIFORNIA ENERGY COMMISSION

CERTIFICATE OF COMPLIANCE	NRCC-LTI-01-E
Indoor Lighting	(Page 2 of 6)
Project Name: Bishops	Date Prepared: 9/12/2017

C. Summary of Allowed Lighting Power

Conditioned and Unconditioned space Lighting must not be combined for compliance

	Indoor Lighting Power for Conditioned Spaces		Watts	Indoor Lighting Power for Unconditioned Spaces		Watts
01	**Installed** Lighting NRCC-LTI-01-E, Table H, page 5	+	1,109	**Installed** Lighting NRCC-LTI-01-E, Table H, page 5	+	0
02	Portable Only for Offices NRCC-LTI-01-E, Table G, page 4	+				
03	Minus Lighting Control Credits NRCC-LTI-02-E, page 2	-	0	Minus Lighting Control Credits NRCC-LTI-02-E, page 2	-	0
04	Adjusted **Installed** Lighting Power (row 1 plus row 2 minus row 3)	=	1,109	Adjusted **Installed** Lighting Power (row 1 minus row 3)	=	0
	Complies ONLY if **Installed** ≤ **Allowed** (Box 04 < Box 05)			Complies ONLY if **Installed** ≤ **Allowed** (Box 04 < Box 05)		
05	**Allowed** Lighting Power Conditioned NRCC-LTI-03-E, page 1 Alterations with replacement luminaires that have at least 50/35% lower power compared to the original existing luminaires, may instead use the allowed wattage from NRCC-LTI-06, page 2		1,501	**Allowed** Lighting Power Unconditioned NRCC-LTI-03-E, page 1 Alterations with replacement luminaires that have at least 50/35% lower power compared to the original existing luminaires, may instead use the allowed wattage from NRCC-LTI-06, page 2		0

D. Declaration of Required Certificates of Installation

Declare by selecting yes for all of the Certificates that will be submitted. (Retain copies and verify forms are completed and signed.)

YES	NO	Compliance Document/Title	
☑	☐	NRCI-LTI-01-E - Must be submitted for all buildings	☐ Field Inspector
☐	☑	NRCI-LTI-02-E - Must be submitted for a lighting control system, or for an Energy Management Control System (EMCS), to be recognized for compliance.	☐ Field Inspector
☐	☑	NRCI-LTI-03-E - Must be submitted for a line-voltage track lighting integral current limiter, or for a supplementary overcurrent protection panel used to energize only line-voltage track lighting, to be recognized for compliance.	☐ Field Inspector
☐	☑	NRCI-LTI-04-E - Must be submitted for two interlocked systems serving an auditorium, a convention center, a conference room, a multipurpose room, or a theater to be recognized for compliance.	☐ Field Inspector
☐	☑	NRCI-LTI-05-E - Must be submitted for a Power Adjustment Factor (PAF) to be recognized for compliance.	☐ Field Inspector
☐	☑	NRCI-LTI-06-E - Must be submitted for additional wattage installed in a video conferencing studio to be recognized for compliance.	☐ Field Inspector

CA Building Energy Efficiency Standards - 2016 Nonresidential Compliance — April 2016

STATE OF CALIFORNIA
INDOOR LIGHTING
CEC-NRCC-LTI-01-E (Revised 04/16)

CALIFORNIA ENERGY COMMISSION

CERTIFICATE OF COMPLIANCE	NRCC-LTI-01-E
Indoor Lighting	(Page 3 of 6)
Project Name: Bishops	Date Prepared: 9/12/2017

E. Declaration of Required Certificates of Acceptance

Declare by selecting yes for all of the Certificates that will be submitted. (Retain copies and verify forms are completed and signed.)

YES	NO	Compliance Document/Title	
☐	☑	NRCA-LTI-02-A - Must be submitted for occupancy sensors and automatic time switch controls.	☐ Field Inspector
☐	☑	NRCA-LTI-03-A - Must be submitted for automatic daylight controls.	☐ Field Inspector
☐	☑	NRCA-LTI-04-A - Must be submitted for demand responsive lighting controls.	☐ Field Inspector
☐	☑	NRCA-LTI-05-A – Must be submitted for institutional tuning power adjustment factor (PAF).	☐ Field Inspector

A Separate Lighting Schedule Must Be Filled Out for Conditioned and Unconditioned Spaces. Installed Lighting Power listed on this Lighting Schedule is only for:
☐ CONDITIONED SPACE ☐ UNCONDITIONED SPACE

F. Indoor Lighting Schedule and Field Inspection Energy Checklist

☐ The actual indoor lighting power listed on the next 2 pages includes all installed permanent and planned portable lighting systems.
☐ When Complete Building Method is used for compliance, list each different type of luminaire on separate lines.
☐ When Area Category Method or Tailored Method is used for compliance, list each different type of luminaire by each different function area on separate lines.
☐ Also include track lighting in schedule, and submit the track lighting compliance document (NRCC-LTI-05-E) when line-voltage track lighting is installed.

CA Building Energy Efficiency Standards - 2016 Nonresidential Compliance — April 2016

STATE OF CALIFORNIA
INDOOR LIGHTING
CEC-NRCC-LTI-01-E (Revised 04/16)

CALIFORNIA ENERGY COMMISSION

CERTIFICATE OF COMPLIANCE	NRCC-LTI-01-E
Indoor Lighting	(Page 4 of 6)
Project Name: Bishops	Date Prepared: 9/12/2017

G. Installed Portable Luminaires in Offices – Exception to Section 140.6(a)

☐ This section shall be filled out ONLY for portable luminaires in offices (As defined in §100.1). All other planned portable luminaires shall be documented on next page of this compliance document.
☐ This section is used to determine if greater than 0.3 watts of portable lighting is planned for any office.
☐ Fill out a separate line for each different office. Small offices that are typical (having the same general and portable lighting) may be grouped together. This allowance shall not be traded between offices having different lighting systems.

Office Portable Luminaire Schedule	Office Installed Portable Luminaire W/ft²							Office Location	Field Inspector	
1	2	3	4	5	6	7	8	9	10	
Complete Luminaire Description (i.e., LED, under cabinet, furniture mounted direct/indirect)	Watts per Luminaire	Number of Luminaires	Installed portable luminaire watts in this office (G02 x G03)	Square feet of this office	Watts per square foot (G04 / G05)	If G06 ≤ 0.3, enter zero; If G06 > 0.3, (G06-0.3)	(G05 x G07)	Identify Office area in which these portable luminaires are installed	Pass	Fail
									☐	☐
									☐	☐
									☐	☐
									☐	☐
									☐	☐
Total installed portable luminaire watts that are greater than 0.3 W/ft² per office:								Enter sum total of all pages into NRCC-LTI-01-E; Page 1		

CA Building Energy Efficiency Standards - 2016 Nonresidential Compliance — April 2016

STATE OF CALIFORNIA
INDOOR LIGHTING
CEC-NRCC-LTI-01-E (Revised 04/16)

CALIFORNIA ENERGY COMMISSION

CERTIFICATE OF COMPLIANCE	NRCC-LTI-01-E
Indoor Lighting	(Page 5 of 6)
Project Name: Bishops	Date Prepared: 9/12/2017

A Separate Lighting Schedule Must Be Filled Out for Conditioned and Unconditioned Spaces. Installed Lighting Power listed on this Lighting Schedule is only for:
☑ CONDITIONED SPACE ☐ UNCONDITIONED SPACE

H. Indoor Lighting Schedule and Field Inspection Energy Checklist

Luminaire Schedule		Installed Watts					Location	Field Inspector [1]	
01	02	03	04		05	06	07	08	
Name or Item Tag	Complete Luminaire Description (i.e, 3 lamp fluorescent troffer, F32T8, one dimmable electronic ballast)	Watts per Luminaire	How wattage was determined: CEC Default from NA8	According to §130.0(c)	Number Luminaires	Total Installed Watts in this area (H03 x H05)	Primary Function area in which these luminaires are installed	Pass	Fail
A	10 W LED	10.0	☑	☐	2	20	Janitors Closet/Utility	☐	☐
B	22W LED	22.0	☑	☐	9	198	Beauty Salon	☐	☐
B2	14.6 W LED	14.6	☑	☐	1	15	Janitors Closet/Utility	☐	☐
D	10W LED	0.0	☐	☑	1	0	Janitors Closet/Utility	☐	☐
L1	L1 - 22W LED	22.0	☑	☐	8	176	Beauty Salon	☐	☐
T	12.5w per ft Track Light (with Current Limiter)	12.5	☑	☐	56	700	Beauty Salon	☐	☐
			☐	☐				☐	☐
			☐	☐				☐	☐
			☐	☐				☐	☐
	INSTALLED WATTS PAGE TOTAL:					1,109	Enter sum total of all pages into NRCC-LTI-01-E; Page 2		

CA Building Energy Efficiency Standards - 2016 Nonresidential Compliance — April 2016

STATE OF CALIFORNIA
INDOOR LIGHTING
CEC-NRCC-LTI-01-E (Revised 04/16)

CALIFORNIA ENERGY COMMISSION

CERTIFICATE OF COMPLIANCE	NRCC-LTI-01-E
Indoor Lighting	(Page 6 of 6)
Project Name: Bishops	Date Prepared: 9/12/2017

DOCUMENTATION AUTHOR'S DECLARATION STATEMENT

1. I certify that this Certificate of Compliance documentation is accurate and complete.

Documentation Author Name:	Peter A. Leptuch, P.E.	Documentation Author Signature:	
Company:	Peter A. Leptuch, P.E.	Signature Date:	9/12/2017
Address:	1236 Golden Eagle Court	CEA Certification Identification (if applicable):	
City/State/Zip:	Aubrey, TX, 76227	Phone:	(940) 735-5127

RESPONSIBLE PERSON'S DECLARATION STATEMENT

I certify the following under penalty of perjury, under the laws of the State of California:
1. The information provided on this Certificate of Compliance is true and correct.
2. I am eligible under Division 3 of the Business and Professions Code to accept responsibility for the building design or system design identified on this Certificate of Compliance (responsible designer).
3. The energy features and performance specifications, materials, components, and manufactured devices for the building design or system design identified on this Certificate of Compliance conform to the requirements of Title 24, Part 1 and Part 6 of the California Code of Regulations.
4. The building design features or system design features identified on this Certificate of Compliance are consistent with the information provided on other applicable compliance documents, worksheets, calculations, plans and specifications submitted to the enforcement agency for approval with this building permit application.
5. I will ensure that a completed signed copy of this Certificate of Compliance shall be made available with the building permit(s) issued for the building, and made available to the enforcement agency for all applicable inspections. I understand that a completed signed copy of this Certificate of Compliance is required to be included with the documentation the builder provides to the building owner at occupancy.

Responsible Designer Name:	Peter A. Leptuch	Responsible Designer Signature:	
Company:	Peter A. Leptuch, P.E.	Date Signed:	9/12/2017
Address:	1236 Golden Eagle Court	License:	E19072
City/State/Zip:	Aubrey, TX 76227	Phone:	(940) 735-5127

CA Building Energy Efficiency Standards - 2016 Nonresidential Compliance — April 2016

GHA
Architecture / Development
14901 Quorum Drive
Suite 300
Dallas, Texas 75254
Ph: (972) 239-8884
Fax: (972) 239-5054

STATE OF TEXAS — PETER A. LEPTUCH — E 19072 — REGISTERED PROFESSIONAL ENGINEER — ELECTRICAL — 09/18/17

BISHOPS
BISHOPS – TENANT FINISHOUT
SOUTH MARKET APARTMENTS
1 SOUTH MARKET STREET
SAN JOSE, CA 95113

DO NOT SCALE DRAWINGS CONTRACTOR TO VERIFY ALL EXISTING CONDITIONS AND DIMENSIONS–NOTIFY ARCHITECT OF ANY DISCREPANCIES PRIOR TO BEGINNING CONSTRUCTION

NO. REVISION

ISSUE

Peter A. Leptuch, P.E.
CA-M35700/CA-E19072
1236 Golden Eagle Ct.
Aubrey, TX 76227
(940) 735-5127

ISSUE FOR PERMIT 09/18/17

PROJECT NUMBER
C170357

SHEET NUMBER
E3.0
ELECTRICAL
TITLE 24
DATE OF THIS PRINTING – 09/18/17

STATE OF CALIFORNIA
INDOOR LIGHTING – LIGHTING CONTROLS
CEC-NRCC-LTI-02-E (Revised 03/16) — CALIFORNIA ENERGY COMMISSION

CERTIFICATE OF COMPLIANCE — NRCC-LTI-02-E
Indoor Lighting - Lighting Controls — (Page 1 of 3)
Project Name: Bishops — Date Prepared: 9/12/2017

A. Mandatory Lighting Control Declaration Statements (Indicate if the measure applies by checking yes or no below.)

YES	NO	Control Requirements
☐	☑	Lighting shall be controlled by self-contained lighting control devices which are certified to the Energy Commission according to the Title 20 Appliance Efficiency Regulations in accordance with Section 110.9.
☐	☑	Lighting shall be controlled by a lighting control system or energy management control system in accordance with §110.9. An Installation Certificate shall be submitted in accordance with Section 130.4(b).
☐	☑	One or more Track Lighting Integral Current Limiters shall be installed which have been certified to the Energy Commission in accordance with §110.9 and §130.0. Additionally, an Installation Certificate shall be submitted in accordance with Section 130.4(a).
☐	☑	A Track Lighting Supplementary Overcurrent Protection Panel shall be installed in accordance with Section 130.9 and Section 130.0. Additionally, an Installation Certificate shall be installed in accordance with Section 130.4(b).
☑	☐	All lighting controls and equipment shall comply with the applicable requirements in §110.9 and shall be installed in accordance with the manufacturer's instructions in accordance with Section 130.1.
☐	☑	All luminaires shall be functionally controlled with manually switched ON and OFF lighting controls in accordance with Section 130.1(a).
☑	☐	General lighting shall be separately controlled from all other lighting systems in an area. Floor and wall display, window display, case display, ornamental, and special effects lighting shall each be separately controlled on circuits that are 20 amps or less. When track lighting is used, general, display, ornamental, and special effects lighting shall each be separately controlled, in accordance with Section 130.1(a)4.
☐	☑	The general lighting of any enclosed area 100 square feet or larger, with a connected lighting load that exceeds 0.5 watts per square foot shall meet the multi-level lighting control requirements in accordance with Section 130.1(b).
☐	☑	All installed indoor lighting shall be equipped with controls that meet the applicable Shut-OFF control requirements in Section 130.1(c).
☐	☑	Lighting in all Daylit Zones shall be controlled in accordance with the requirements in Section 130.1(d) and daylit zones are shown on the plans.
☐	☑	Lighting power in buildings larger than 10,000 square feet shall be capable of being automatically reduced in response to a Demand Responsive Signal in accordance with Section 130.1(e).
☑	☐	Before an occupancy permit is granted for a newly constructed building or area, or a new lighting system serving a building, area, or site is operated for normal use, indoor lighting controls serving the building, area, or site shall be certified as meeting the Acceptance Requirements for Code Compliance in accordance with Section 130.4(a). The controls required to meet the Acceptance Requirements include automatic daylight controls, automatic shut-OFF controls, and demand responsive controls.

STATE OF CALIFORNIA
INDOOR LIGHTING – LIGHTING CONTROLS
CEC-NRCC-LTI-02-E (Revised 03/16) — CALIFORNIA ENERGY COMMISSION

CERTIFICATE OF COMPLIANCE — NRCC-LTI-02-E
Indoor Lighting - Lighting Controls — (Page 2 of 3)
Project Name: Bishops — Date Prepared: 9/12/2017

A separate document must be filled out for Conditioned and Unconditioned Spaces. This page is used only for the following:
☑ CONDITIONED SPACES ☐ UNCONDITIONED SPACES

B. Mandatory and Prescriptive Indoor Lighting Control Schedule, PAF Calculation, and Field Inspection Checklist

Lighting Control Schedule			Standards Complying With [1] (✓ all that apply, or enter 'E' if Exempted)							PAF Credit Calculation [2]				
01	02	03	04	05	06	07	08	09	10	11	12	13	14	15
Location in Building	Type/Description of Lighting Control (i.e.: occupancy sensor, automatic time switch, dimmer, automatic daylight, etc...)	# of Units	§130.1(a)	§130.0(b)	§130.1(c)	§130.1(d)	§130.1(e)	§140.6(a)2	§140.6(d)	Watts of Controlled Lighting	PAF	Control Credit (K x L)	✓ if Acceptance Test Required	Field Inspector Pass / Fail
Barber Shop	Daylight - Dimming/Off		☐	☐	☐	☐	☐	☑	☐	0	0.10	0	✓	☐ ☐
			☐	☐	☐	☐	☐	☐	☐			

STATE OF CALIFORNIA
INDOOR LIGHTING POWER ALLOWANCE
CEC-NRCC-LTI-03-E (Revised 06/16) CALIFORNIA ENERGY COMMISSION

CERTIFICATE OF COMPLIANCE	NRCC-LTI-03-E
Certificate of Compliance - Indoor Lighting Power Allowance	(Page 4 of 4)
Project Name: Bishops	Date Prepared: 9/12/2017

DOCUMENTATION AUTHOR'S DECLARATION STATEMENT

1. I certify that this Certificate of Compliance documentation is accurate and complete.

Documentation Author Name:	Peter A. Leptuch, P.E.	Documentation Author Signature:	[signature]
Company:	Peter A. Leptuch, P.E.	Signature Date:	9/12/2017
Address:	1236 Golden Eagle Court	CEA/ HERS Certification Identification (if applicable):	
City/State/Zip:	Aubrey, TX, 76227	Phone:	(940) 735-5127

RESPONSIBLE PERSON'S DECLARATION STATEMENT

I certify the following under penalty of perjury, under the laws of the State of California:
1. The information provided on this Certificate of Compliance is true and correct.
2. I am eligible under Division 3 of the Business and Professions Code to accept responsibility for the building design or system design identified on this Certificate of Compliance (responsible designer).
3. The energy features and performance specifications, materials, components, and manufactured devices for the building design or system design identified on this Certificate of Compliance conform to the requirements of Title 24, Part 1 and Part 6 of the California Code of Regulations.
4. The building design features or system design features identified on this Certificate of Compliance are consistent with the information provided on other applicable compliance documents, worksheets, calculations, plans and specifications submitted to the enforcement agency for approval with this building permit application.
5. I will ensure that a completed signed copy of this Certificate of Compliance shall be made available with the building permit(s) issued for the building, and made available to the enforcement agency for all applicable inspections. I understand that a completed signed copy of this Certificate of Compliance is required to be included with the documentation the builder provides to the building owner at occupancy.

Responsible Designer Name:	Peter A. Leptuch	Responsible Designer Signature:	[signature]
Company:	Peter A. Leptuch, P.E.	Date Signed:	9/12/2017
Address:	1236 Golden Eagle Court	License:	E19072
City/State/Zip:	Aubrey, TX 76227	Phone:	(940) 735-5127

STATE OF CALIFORNIA
LINE-VOLTAGE TRACK LIGHTING WORKSHEET
CEC-NRCC-LTI-05-E (Revised 07/16) CALIFORNIA ENERGY COMMISSION

CERTIFICATE OF COMPLIANCE	NRCC-LTI-05-E
Indoor Lighting – Line-Voltage Track Lighting Worksheet	(Page 1 of 2)
Project Name: Bishops	Date Prepared: 9/12/2017

There are four different methods available for determining how many watts of line-voltage track, or line-voltage busway, has been installed. One or more methods may be used to determine how many watts of line-voltage track, or line-voltage busway, has been installed. Use this worksheet to separately calculate the input wattage for each system.

Separately enter each row of this worksheet into the Luminaire Schedule in Section H of NRCC-LTI-01-E

Method 1 is the only option available for determining wattage for track or busway rated for more than 20 amperes

☐ A. METHOD 1 – VOLT-AMPERE (VA) RATING OF THE BRANCH CIRCUIT(S)

01	02
BRANCH CIRCUIT NAME OR ID	VOLT-AMPERE (VA) RATING OF THE BRANCH CIRCUIT

☐ B. METHOD 2 – USE THE HIGHER OF 45 WATTS PER LINEAR FOOT OF TRACK OR TOTAL RATED WATTAGE OF ALL LUMINAIRES

01	02	03	04	05	06
Track or Name #	Linear Feet of Track	(W/LF)	B02 x B03 (W)	Total Rated Wattage of All Luminaires	Larger of B04 or B05
		45			
		45			
		45			

☐ C. METHOD 3 – USE THE HIGHER OF: 12.5 WATTS / LINEAR FOOT OF TRACK – OR VA RATING OF INTEGRAL CURRENT LIMITER

☐ Only integral current limiters which are certified to the Energy Commission shall be recognized by the Standards.
☐ This method shall not be recognized if an Installation Certificate is not submitted.

01	02	03	04	05	06
Track or Name #	Linear Feet of Track	(W/LF)	C02 x C03 (W)	VA Rating of Integral Current Limiter	Larger of C04 or C05
		12.5			
		12.5			
		12.5			

☐ D. METHOD 4 - DEDICATED TRACK LIGHTING SUPPLIMENTARY OVERCURRENT PROTECTION PANEL

☐ This method shall not be recognized if an Installation Certificate is not submitted.
☐ This method shall be used only for line-voltage track lighting, and shall not be recognized for any other lighting systems. If any other lighting systems or devices are installed, the supplementary overcurrent protection panel shall not be recognized for compliance with the Standards

01	02	03	04
Name or ID	Voltage of the Branch Circuit	Sum of the Ampere Rating of all Devices Installed in the Panel	Wattage = Sum of the Ampere Ratings of all of the Devices Times the Branch Circuit Voltage (D02 x D03)

DOCUMENTATION AUTHOR'S DECLARATION STATEMENT

STATE OF CALIFORNIA
LINE-VOLTAGE TRACK LIGHTING WORKSHEET
CEC-NRCC-LTI-05-E (Revised 07/16) CALIFORNIA ENERGY COMMISSION

CERTIFICATE OF COMPLIANCE	NRCC-LTI-05-E
Indoor Lighting – Line-Voltage Track Lighting Worksheet	(Page 2 of 2)
Project Name: Bishops	Date Prepared: 9/12/2017

1. I certify that this Certificate of Compliance documentation is accurate and complete.

Documentation Author Name:	Peter A. Leptuch, P.E.	Documentation Author Signature:	[signature]
Company:	Peter A. Leptuch, P.E.	Signature Date:	9/12/2017
Address:	1236 Golden Eagle Court	CEA/ HERS Certification Identification (if applicable):	
City/State/Zip:	Aubrey, TX, 76227	Phone:	(940) 735-5127

RESPONSIBLE PERSON'S DECLARATION STATEMENT

I certify the following under penalty of perjury, under the laws of the State of California:
1. The information provided on this Certificate of Compliance is true and correct.
2. I am eligible under Division 3 of the Business and Professions Code to accept responsibility for the building design or system design identified on this Certificate of Compliance (responsible designer).
3. The energy features and performance specifications, materials, components, and manufactured devices for the building design or system design identified on this Certificate of Compliance conform to the requirements of Title 24, Part 1 and Part 6 of the California Code of Regulations.
4. The building design features or system design features identified on this Certificate of Compliance are consistent with the information provided on other applicable compliance documents, worksheets, calculations, plans and specifications submitted to the enforcement agency for approval with this building permit application.
5. I will ensure that a completed signed copy of this Certificate of Compliance shall be made available with the building permit(s) issued for the building, and made available to the enforcement agency for all applicable inspections. I understand that a completed signed copy of this Certificate of Compliance is required to be included with the documentation the builder provides to the building owner at occupancy.

Responsible Designer Name:	Peter A. Leptuch	Responsible Designer Signature:	[signature]
Company:	Peter A. Leptuch, P.E.	Date Signed:	9/12/2017
Address:	1236 Golden Eagle Court	License:	E19072
City/State/Zip:	Aubrey, TX 76227	Phone:	(940) 735-5127

STATE OF CALIFORNIA
SIGN LIGHTING
CEC-NRCC-LTS-01-E (Revised 08/16) CALIFORNIA ENERGY COMMISSION

CERTIFICATE OF COMPLIANCE	NRCC-LTS-01-E
Sign Lighting	(Page 1 of 5)
Project Name: Bishops	Date Prepared: 9/12/2017

A. General Information

Project Address: 1 South Market Street San Jose, CA 95113

Location of Sign	☐ Outdoor Signs	☐ Indoor Signs
Phase of Sign Construction	☐ New Signs	☐ Sign Alterations
Type of Lighting Control	☒ New Lighting Controls	☒ Replaced Lighting Controls ☐ Not Installing Lighting Controls

This Certificate of Compliance includes the following components (check all that apply):
☒ Mandatory Measures (Lighting Controls) ☐ Maximum Allowed Lighting Power ☐ Specific Lighting Sources

1. Mandatory Sign Lighting Controls

NOTES:
1. *The same responsible person may install both the sign lighting power and the sign lighting controls, or a different responsible person may install the sign lighting controls than the responsible person installing the sign lighting power.*
2. *The Mandatory Measures (sign lighting controls) are required for compliance with the sign lighting Standards. If the person responsible for installing the sign lighting power is not also responsible for the sign lighting controls, then the owner of the sign, general contractor, or architect shall be responsible to have the sign lighting controls installed.*
3. *If more than one person has responsibility for compliance, each responsible person shall prepare and sign a Certificate of Compliance and an Installation Certificate applicable to the portion of construction for which they are responsible; alternatively, the person with chief responsibility for construction shall prepare and sign the Certificate of Compliance Declaration Statement for the entire construction (e.g. a C-10 contractor may complete parts 1a and 1b on one compliance document and a C-45 contractor may complete parts 2a and 2b on a separate compliance document – the Responsible Designer shall submit the two compliance documents together for the same complete installation).*

I have responsibility for installing the sign lighting controls:
☐ Yes, I have responsibility for the sign lighting controls, and will complete parts 1a and 1b of this compliance document
☐ No, I do not have responsibility for installing the sign lighting controls. Someone else will complete parts 1a and 1b of this compliance document.

1a. Check Yes or No for all of the following statements:	
1	There are existing sign lighting controls that comply with the applicable provisions of §110.9 and §130.3 ☐ Yes ☐ No
2	There are no existing sign lighting controls and I will be installing sign lighting controls that comply with the applicable provisions of §110.9 and §130.3 ☐ Yes ☐ No
3	There are existing sign lighting controls that do not comply with the applicable provisions of §110.9 and §130.3 and I will be installing sign lighting controls aht comply with the applicable provisions of §110.9 and §130.3 ☐ Yes ☐ No

STATE OF CALIFORNIA
SIGN LIGHTING
CEC-NRCC-LTS-01-E (Revised 08/16) CALIFORNIA ENERGY COMMISSION

CERTIFICATE OF COMPLIANCE	NRCC-LTS-01-E
Sign Lighting	(Page 2 of 5)
Project Name: Bishops	Date Prepared: 9/12/2017

1b. Mandatory Sign Lighting Controls

If the person signing the Certificate of Compliance Declaration Statement on this NRCC-LTS-01-E is responsible for complying with the sign lighting control requirements, that person shall answer all of the following questions:

If there are construction documents, indicate where on the building plans the mandatory measures (sign lighting control) note block can be located:

1	**§130.3(a)1.** All **indoor sign lighting** is controlled with an automatic time-switch control or astronomical time-switch control.	Y ☐	N ☐	NA ☐
2	**§130.3(a)2A.** All **outdoor sign lighting** is controlled with a photocontrol in addition to an automatic time-switch control, or an astronomical time-switch control.	Y ☐	N ☐	NA ☐
	EXCEPTION to Section 130.3(a)2A: Outdoor signs in tunnels, and signs in large permanently covered outdoor areas that are intended to be continuously lit, 24 hours per day and 365 days per year.	Y ☐		NA ☐
3	**§130.3(a)2B.** All **outdoor sign lighting** that is ON both day and night is controlled with a dimmer that provides the ability to automatically reduce sign lighting power by a minimum of 65% during nighttime hours. Signs that are illuminated at night and for more than 1 hour during daylight hours shall be considered ON both day and night.	Y ☐	N ☐	NA ☐
	EXCEPTION to Section 130.3(a)2B: Outdoor signs in tunnels and large covered areas that are intended to be illuminated both day and night.	Y ☐		NA ☐
4	**§130.3(a)3. Demand Responsive Electronic Message Center Control.** An Electronic Message Center (EMC) having a new connected lighting power load greater than 15 kW has a control installed that is capable of reducing the lighting power by a minimum of 30% when receiving a demand response signal.	Y ☐	N ☐	N/A ☐
	EXCEPTION to Section 130.3(a)3: Lighting for EMCs that is not permitted by a health or life safety statute, ordinance, or regulation to be reduced by 30%.	Y ☐		NA ☐

Field Inspector Notes:

STATE OF CALIFORNIA
SIGN LIGHTING
CEC-NRCC-LTS-01-E (Revised 08/16) CALIFORNIA ENERGY COMMISSION

CERTIFICATE OF COMPLIANCE	NRCC-LTS-01-E
Sign Lighting	(Page 3 of 5)
Project Name: Bishops	Date Prepared: 9/12/2017

2. Mandatory Sign Lighting Measures

I have responsibility for installing the sign lighting
☐ Yes, I have responsibility for the sign lighting, and will complete parts 2a and 2b of this compliance document
☐ No, I do not have responsibility for installing the sign lighting. Someone else will complete parts 2a and 2b of this compliance document.

2a. Maximum Allowed Lighting Power Method of Compliance
Certificate of Compliance and Field Inspection Energy Checklist.
Complete this part if there are signs using the maximum allowed lighting power method of compliance. (Complete part 2b of this Certificate of Compliance if there are signs using the Specific Lighting Sources method of compliance).

A	B	C	D	E	F	G	H	I	J
Symbol or Code	Description of the Sign	OPTIONAL – Energy Verified Label (see instructions below)	Allotted Watts				Design Watts	Complies Y/N	Field Inspector Check that Sign Complies
			Sign Area (ft²)	Internally (I) or Externally (E) Illuminated	Allowed LPD (I = 12 W/ft²) (E = 2.5 W/ft²)	Allowed Watts (D x F)	Total Installed Watts for Sign	Complies if H ≤ G	
		✓							✓
		☐							☐
		☐							☐
		☐							☐
		☐							☐
		☐							☐
		☐							☐
		☐							☐
		☐							☐
		☐							☐
		☐							☐

A	Symbol or code used on the plans (when plans are required) and other documents.
B	A description of the sign, or location of sign on the building, and the location of sign on construction documents.
C	OPTIONAL - Check this box only if this sign has a permanent, pre-printed, factory-installed, ENERGY VERIFIED label, confirming that the sign complies with the Section 140.8 of the California 2016 Title 24, Part 6 Standards, using the Maximum Allowed Lighting Power method of compliance. The only labels that will be recognized for this purpose are ENERGY VERIFIED Certification Marks authorized by Underwriters Laboratories (UL) or other Product Certification Body accredited to ISO/IEC Guide 65 by the American National Standards Institute in accordance with ISO/IEC 17011. Surveillance by the Accredited Certification Body shall be an ongoing annual inspection program carried out by a Type A Inspection body in accordance with ISO/IEC 17020. For signs with such an ENERGY VERIFIED label, columns 'D' through 'I' are not required to be filled out. Note: Using an ENERGY VERIFIED label is an optional method to validate compliance. An ENERGY VERIFIED label is not needed for compliance.
D	The sign area in square feet.
E	List "I" if the sign is internally illuminated. List "E" if the sign is externally illuminated.
F	Allowed watts per square foot. Enter 12 if the sign is listed as "I" in column E. Enter 2.5 if sign is listed as "E" in column E.
G	Multiply the square footage in column D times the allowed Lighting Power Density (LPD = watts) in column F.
H	Show the total installed watts in the sign, as determined according to the applicable provisions of §130(c).
I	Enter Y if the number in column H is less than or equal to the number in column G. Otherwise, the sign does not comply.
J	This page doubles as a field inspection checklist.

Field Inspector Notes:

STATE OF CALIFORNIA
SIGN LIGHTING
CEC-NRCC-LTS-01-E (Revised 08/16) CALIFORNIA ENERGY COMMISSION

CERTIFICATE OF COMPLIANCE	NRCC-LTS-01-E
Sign Lighting	(Page 4 of 5)
Project Name: Bishops	Date Prepared: 9/12/2017

2b. Specific Lighting Source Method of Compliance
Certificate of Compliance and Field Inspection Energy Checklist
Complete this part if there are signs using the Specific Lighting Source method of compliance. (Complete part 2 of this Certificate of Compliance if there are signs using the maximum allowed lighting power method of compliance)

A	B	C	D	E
Symbol or Code	Description	OPTIONAL ENERGY VERIFIED label (see instructions below)	Specific light source used for compliance. Shall include only lighting technologies listed below (List all that apply)	Field Inspector Check that Sign Complies ✓
		☐		☐
		☐		☐
		☐		☐
		☐		☐
		☐		☐

A		Symbol or code used on the plans (when plans are required) and other documents.
B		A narrative description of the sign, or location of sign on the building, and the location of sign on construction documents.
C		OPTIONAL - Check this box only if this sign has a permanent, pre-printed, factory-installed ENERGY VERIFIED label, confirming that this sign complies with the Section 140.8 of the California 2016 Title 24, Part 6 Standards, using the Specific Lighting Source Method of Compliance. The only labels that will be recognized for this purpose are ENERGY VERIFIED Certification Marks authorized by Underwriters Laboratories (UL) or other Product Certification Body accredited to ISO/IEC Guide 65 by the American National Standards Institute in accordance with ISO/IEC 17011. Surveillance by the Accredited Certification Body shall be an ongoing annual inspection program carried out by a Type A inspection body in accordance with ISO/IEC 17020. For signs with such an ENERGY VERIFIED label, column 'D' is not required to be filled out. Note: Using an ENERGY VERIFIED label is an optional method to validate compliance. An ENERGY VERIFIED label is not needed for compliance.
D		Specific Light Source Compliance Method. The sign(s) identified above use only the following lighting technologies: List all applicable numbers (1 through 9) that apply in column D above for each row.
	1	High pressure sodium lamps
	2	Metal halide lamps that are pulse start or ceramic served by a ballast that has a minimum efficiency of 88% or greater. Ballast efficiency is the measured output wattage to the lamp divided by the measured operating input wattage when tested according to ANSI C82.6-2005.
	3	Metal halide lamps that are pulse start that are 320 watts or smaller, are not 250 watt or 175 watt lamps, and are served by a ballast that has a minimum efficiency of 80%. Ballast efficiency is the measured output wattage to the lamp divided by the measured operating input wattage when tested according to ANSI C82.6-2005.
	4	Neon or cold cathode lamps with transformer or power supply efficiency greater than or equal to a minimum efficiency of 75% when the transformer or power supply rated output current is less than 50 mA. The ratio of the output wattage to the input wattage is at 100% tubing load.
	5	Neon or cold cathode lamps with transformer or power supply efficiency greater than or equal to a minimum efficiency of 68% when the transformer or power supply rated output current is 50 mA or greater. The ratio of the output wattage to the input wattage is at 100% tubing load.
	6	Fluorescent lighting systems meeting one of the following requirements: A.) Use only lamps with a minimum color rendering index (CRI) of 80; or B.) Use only electronic ballasts with a fundamental output frequency not less than 20 kHz.
	7	Light emitting diodes (LEDs) with a power supply having an efficiency of 80% or greater.
	8	Single voltage external power supplies that are designed to convert 120 volt AC input into lower voltage DC or AC output, and have a nameplate output power less than or equal to 250 watts, shall comply with the applicable requirements of the Appliance Efficiency Regulations (Title 20).
	9	Compact fluorescent lamps that do not contain a medium screw base sockets (E24/E26).
E		This page doubles as a field inspection checklist.

Field Inspector Notes:

STATE OF CALIFORNIA
SIGN LIGHTING
CEC-NRCC-LTS-01-E (Revised 08/16) CALIFORNIA ENERGY COMMISSION

CERTIFICATE OF COMPLIANCE	NRCC-LTS-01-E
Sign Lighting	(Page 5 of 5)
Project Name: Bishops	Date Prepared: 9/12/2017

DOCUMENTATION AUTHOR'S DECLARATION STATEMENT

1. I certify that this Certificate of Compliance documentation is accurate and complete.

Documentation Author Name:	Peter A. Leptuch, P.E.	Documentation Author Signature:	[signature]
Company:	Peter A. Leptuch, P.E.	Signature Date:	9/12/2017
Address:	1236 Golden Eagle Court	CEA/ HERS Certification Identification (if applicable):	
City/State/Zip:	Aubrey, TX, 76227	Phone:	(940) 735-5127

RESPONSIBLE PERSON'S DECLARATION STATEMENT

I certify the following under penalty of perjury, under the laws of the State of California:
1. The information provided on this Certificate of Compliance is true and correct.
2. I am eligible under Division 3 of the Business and Professions Code to accept responsibility for the building design or system design identified on this Certificate of Compliance (responsible designer).
3. The energy features and performance specifications, materials, components, and manufactured devices for the building design or system design identified on this Certificate of Compliance conform to the requirements of Title 24, Part 1 and Part 6 of the California Code of Regulations.
4. The building design features or system design features identified on this Certificate of Compliance are consistent with the information provided on other applicable compliance documents, worksheets, calculations, plans and specifications submitted to the enforcement agency for approval with this building permit application.
5. I will ensure that a completed signed copy of this Certificate of Compliance shall be made available with the building permit(s) issued for the building, and made available to the enforcement agency for all applicable inspections. I understand that a completed signed copy of this Certificate of Compliance is required to be included with the documentation the builder provides to the building owner at occupancy.

Responsible Designer Name:	Peter A. Leptuch	Responsible Designer Signature:	[signature]
Company:	Peter A. Leptuch, P.E.	Date Signed:	9/12/2017
Address:	1236 Golden Eagle Court	License:	E19072
City/State/Zip:	Aubrey, TX 76227	Phone:	(940) 735-5127

GHA
Architecture / Development
14901 Quorum Drive
Suite 300
Dallas Texas 75254
Ph: (972) 239-8884
Fax: (972) 239-5054

REGISTERED PROFESSIONAL ENGINEER
PETER A. LEPTUCH
E 19072
ELECTRICAL
STATE OF CALIFORNIA

BISHOPS
BISHOPS – TENANT FINISHOUT
SOUTH MARKET APARTMENTS
1 SOUTH MARKET STREET
SAN JOSE, CA 95113

DO NOT SCALE DRAWINGS
CONTRACTOR TO VERIFY
ALL EXISTING CONDITIONS AND
DIMENSIONS–NOTIFY ARCHITECT
OF ANY DISCREPANCIES PRIOR
TO BEGINNING CONSTRUCTION

NO. REVISION

ISSUE

Peter A. Leptuch, P.E.
CA-M35700/CA-E19072
1236 Golden Eagle Ct
Aubrey, TX 76227
(940) 735-5127

ISSUE FOR PERMIT 09/18/17

PROJECT NUMBER
C170357

SHEET NUMBER
E3.2
ELECTRICAL
TITLE 24
DATE OF THIS PRINTING - 09/18/17